Operating Instructions
Original Operating Instructions

Cubis®

MCA Models
High-capacity Precision Balances

1000047974

SARTORIUS

Contents

1 About these Instructions . . . 6
1.1 Scope . . . 6
1.2 Symbols Used . . . 6
1.2.1 Warnings in Operating Instructions . . . 6
1.2.2 Other Symbols . . . 7
1.3 Target Groups . . . 7

2 Safety Instructions . . . 8
2.1 Intended Use . . . 8
2.1.1 Modifications to the Device . . . 8
2.1.2 Repairs to the Device . . . 8
2.2 Personnel Qualification . . . 9
2.3 Significance of these Instructions . . . 9
2.4 Functionality of the Device . . . 9
2.5 Safety Information on the Device . . . 9
2.6 Electrical Equipment . . . 10
2.6.1 Damage to the Device's Electrical Equipment . . . 10
2.6.2 Working on the Device's Electrical Equipment . . . 10
2.6.3 Power Supply Unit and Power Supply Cable . . . 10
2.7 Conduct in an Emergency . . . 10
2.8 Accessories, Consumables, and Spare Parts . . . 11
2.9 Glass Breakage . . . 11

3 Device Description . . . 12
3.1 Device Overview . . . 12
3.2 Weighing Pan and Associated Components . . . 13
3.3 Connections and Components on the Weighing Module . . . 14
3.4 Connections on the Control Unit . . . 15
3.5 Safety Equipment . . . 15
3.5.1 Protective Caps . . . 15
3.6 Conformity-assessed Devices . . . 16
3.7 Symbols on the Device . . . 16

4 Operating Design . . . 17
4.1 Operating Elements in the Main Menu . . . 17
4.2 Operating Elements in Task Management . . . 18
4.3 Operating Elements in the Weighing Display . . . 19
4.4 Advanced Operator Guidance . . . 20
4.5 Messages . . . 21
4.6 Status Center . . . 22
4.7 Keypad . . . 23
4.8 Status Display of the Buttons . . . 23
4.9 Buttons in the Operating Display . . . 24
4.9.1 Buttons for Navigation or Organization in Displays . . . 24
4.9.2 Buttons for Editing or Managing Entries . . . 25
4.9.3 Buttons for Weighing, Printing, and Export Functions . . . 26
4.10 Displays in the Operating Display . . . 28
4.11 User Management . . . 29
4.11.1 User Profiles . . . 29
4.11.2 User Login . . . 29
4.12 Weighing and Print Profiles . . . 29
4.13 Tasks and Applications . . . 29
4.14 Menu Structure . . . 30
4.14.1 Main Menu . . . 30
4.14.2 "Settings" Menu . . . 31
4.15 Navigating the Menus . . . 37

5 Installation . . . 39
5.1 Scope of Delivery . . . 39
5.2 Selecting an Installation Site . . . 39
5.3 Unpacking the Device . . . 40
5.4 Removing the Control Unit . . . 40
5.5 Connecting the Ethernet Cable . . . 41
5.6 Preparing Below-balance Weighing . . . 41
5.7 Positioning the Weighing Pan and Associated Components . . . 43
5.8 Acclimatization . . . 43

6 Getting Started . . . 44
6.1 Installing the AC Adapter . . . 44
6.2 Connecting the Power Supply . . . 45
6.3 Attaching the Protective Caps . . . 45

7 System Settings . . . 46
7.1 Performing System Settings . . . 46
7.2 Switching Off the isoCAL Function . . . 46
7.3 Assigning a Password . . . 47
7.4 Opening the Help Function . . . 47
7.5 Setting Up Device for Network Printer . . . 47
7.5.1 Selecting Configuration for Network Printing . . . 47
7.5.2 Setting Up Device for Network Printer via Independent Wi-Fi Network . . . 48
7.5.3 Setting Up Device for Network Printer via Company Network . . . 49
7.5.4 Configuring Print Profiles . . . 50

7.6 Descriptions of Interface Protocols and Website Certificates 50
7.7 Parameter List 51
7.7.1 Parameters in the "User Management" Menu 51
7.7.2 Parameters in the "Access Management" Menu 51
7.7.3 Parameters in the "Timer-controlled Actions" Menu 52
7.7.4 Parameters in the "Weighing and Print Profiles / Weighing" Menu 53
7.7.5 Parameters in the "Weighing and Print Profiles / YDP30, PC Direct, or SBI Direct" Menu 55
7.7.6 Parameters in the "Weighing and Print Profiles / PDF or CSV" Menu 57
7.7.7 Parameters in the "Connections / Connectors" Menu 58
7.7.8 Parameters in the "Connections / Network" Menu 59
7.7.9 Parameters in the "Connections / Website / Web Services" Menu 60
7.7.10 Parameters in the "Connections / Certificates" Menu 61
7.7.11 Parameters in the "Connections / Interfaces / Serial Communication over Network" (Ethernet) Menu 61
7.7.12 Parameters in the "Connections / Interfaces / COM-RS232 Interface" Menu 62
7.7.13 Parameters in the "Connections / Interfaces / USB-B Interface" Menu .. 63
7.7.14 Parameters in the "Connections / SBI Protocol" Menu 64
7.7.15 Parameters in the "Connections / Climate Modules" Menu 65
7.7.16 Parameters in the "Connections / Connected Devices / Motion Sensor" Menu (only for connected motion sensors) 65
7.7.17 Parameters in the "Connections / Connected Devices / External USB Keys (only for connected peripheral device)" Menu 65
7.7.18 Parameters in the "Device Settings / Date and Time" Menu 66
7.7.19 Parameters in the "Device Settings / Safe Weighing" Menu 66
7.7.20 Parameters in the "Device Settings / Preload" Menu 67
7.7.21 Parameters in the "Device Settings / Calibration / Adjustment Report" Menu 67
7.7.22 Parameters in the "Device Settings / minUSP" Menu 68
7.7.23 Parameters in the "Device Settings / Measurement Uncertainty" Menu 68
7.7.24 Parameters in the "Device Settings / Device ID" Menu 69
7.7.25 Parameters in the "Device Settings / Electronic Signature" Menu 69
7.7.26 Parameters in the "Device Settings / Start-up Behavior" Menu 69
7.7.27 Parameters in the "Device Settings / Display Properties" Menu 70
7.7.28 Parameters in the "Device Settings / Sound (Loudspeaker)" Menu 70
7.7.29 Parameters in the "Device Maintenance" Menu 71

8 Operation 72
8.1 Switching the Device On and Off 72
8.2 Logging Users In and Out 73
8.3 Leveling the Device 73
8.3.1 Level Device with Inclination Sensor 73
8.4 Activating Applications and Adding a Task ... 74
8.4.1 Activating Applications 74
8.4.2 Adding an Application to a Task 75
8.5 Adding Weighing and Print Profiles to a Task 75
8.6 Preparing Weighings 75
8.7 Weighing 76
8.8 Overview of Calibration, Adjustment, and Linearization 76
8.9 Adjusting with the isoCAL Function 77
8.10 Internally Calibrating and Adjusting the Device 78
8.11 Weighing and Printing with ID Marking 78
8.11.1 Saving Values for Printouts 78
8.11.2 Marking Saved Values as Invalid 79
8.11.3 Marking Saved Values as Valid 79
8.11.4 Printing Saved Values 79
8.11.5 Exiting the Task 80
8.12 Viewing the Data Storage Device 80
8.13 Running Applications (Examples) 80
8.13.1 Executing the "Unit Change" Function 80
8.13.2 Running the "Statistics" Application ... 81 (from QAPP Package "Essentials")

9 Cleaning and Maintenance 82
9.1 Preparing the Device 82
9.2 Cleaning the Device 82
9.3 Assembling and Connecting the Device 83
9.4 Maintenance Schedule 83
9.5 Performing a Software Update 83
9.6 Performing a QAPP Center Update 84

10 Malfunctions ... 85
10.1 Warning Messages ... 85
10.2 Troubleshooting ... 85

11 Decommissioning ... 86
11.1 Decommissioning the Device ... 86

12 Transport ... 86
12.1 Transporting the Device ... 86

13 Storage and Shipping ... 87
13.1 Storage ... 87
13.2 Returning Device and Parts ... 87

14 Disposal ... 88
14.1 Information on Decontamination ... 88
14.2 Disposing of Device and Parts ... 88
14.2.1 Information on Disposal ... 88
14.2.2 Disposal ... 88

15 Technical Data ... 89
15.1 Dimensions and Weight ... 89
15.1.1 High-capacity Precision Balance ... 89
15.2 Power Supply ... 89
15.2.1 Device ... 89
15.2.2 Power Supply Unit ... 89
15.2.3 Safety of Electrical Equipment ... 90
15.2.4 Electromagnetic Compatibility ... 90
15.3 Ambient Conditions ... 90
15.3.1 Installation Site ... 90
15.3.2 Ambient Temperature for the isoCAL Function ... 91
15.3.3 Protection Class ... 91
15.4 Materials ... 91
15.5 Integrated Clock ... 91
15.6 Backup Battery ... 91
15.7 Metrological Data ... 92
15.7.1 Models MCA32202P | MCA70201S | MCA50201S | MCA36201S ... 92
15.7.2 Models MCA36201P | MCA20201S | MCA11201S | MCA70200S | MCA36200S ... 93
15.8 Recommended Calibration Weight ... 94
15.9 isoCAL Function ... 94
15.9.1 Models MCA32202P | MCA70201S | MCA50201S | MCA70200S ... 94
15.9.2 Models MCA36201S | MCA36201P | MCA20201S | MCA11201S | MCA36200S ... 94
15.10 Data Storage Device ... 95
15.11 Interfaces ... 95
15.11.1 Specifications for the COM-RS232 Interface ... 95
15.11.2 Specifications for the USB-A Interface ... 95
15.11.3 Specifications for the USB-B Interface ... 95

16 Accessories ... 96
16.1 Accessories ... 96
16.1.1 Printers and Communication ... 96
16.1.2 Displays and Input | Output Elements ... 97
16.1.3 Weighing Tables ... 97
16.1.4 Weighing Accessories ... 97

17 Sartorius Service ... 98

18 Conformity Documents ... 98
18.1 EU Declaration of Conformity ... 98
18.2 UK Declaration of Conformity ... 100
18.3 Certificate of Compliance ... 101

1 About these Instructions

1.1 Scope

These instructions are part of the device. These instructions apply to the device in the following versions:

Device	Model
High-capacity precision balance with a rectangular weighing pan	MCA11201S-... | MCA20201S-... | MCA36200S-... | MCA36201P-... | MCA36201S-... | MCA50201S-... | MCA70200S-... | MCA70201S-...
High-capacity precision balance with a round weighing pan	MCA32202P-...

Software Version	Version, at least
Package release	09-03-05.01.11
QAPP-Center Version	09-06-05.03.02

1.2 Symbols Used

1.2.1 Warnings in Operating Instructions

⚠ **WARNING**
Denotes a danger with the risk that death or severe injury may result if it is **not** avoided.

⚠ **CAUTION**
Denotes a hazard that may result in moderate or minor injury if it is **not** avoided.

NOTICE
Denotes a danger with the risk that property damage may result if it is **not** avoided.

1.2.2 Other Symbols

▶	Required action: Describes actions which must be carried out.
▷	Result: Describes the result of the actions carried out.
[ ]	Text inside brackets refers to control and display items.
[ ]	Text inside brackets indicates status, warning, and error messages.
M	Indicates information for legal metrology for conformity-assessed (verified) devices. Conformity-assessed devices are also referred to as "verified" in these instructions.

Figures on the Operating Display

The figures on the operating display of the device may deviate from those in these instructions.

1.3 Target Groups

These instructions are addressed to the following target groups. The target groups must possess the specified knowledge.

Target group	Knowledge and responsibilities
User	The user is familiar with the operation of the device and the associated work processes. They understand the hazards which may arise when working with the device and know how to prevent them. They have been trained in the operation of the device. The training is carried out by the operating engineer | laboratory manager or the operator of the device.
Operator	The operator of the device is responsible for compliance with safety requirements and workplace safety regulations. The operator must ensure that all persons who work with the device have access to the relevant information and are trained in working with the device.

2 Safety Instructions

2.1 Intended Use

The device is a high-resolution balance, which can be used in laboratories. The device was developed to accurately determine the mass of materials in liquid, paste, powder, or solid form.

Appropriate containers must be used for loading each type of material. The device can be used in stand-alone operation or can be operated on a PC.

The device is exclusively designed for use in accordance with these instructions. Any further use beyond this is considered **improper**.

If the device is **not** used properly: The protective systems of the device may be impaired. This can lead to unforeseeable personal injury or property damage.

Operating Conditions for the Device

Do **not** use the device in potentially explosive environments. Only use the device indoors.

The device may only be used with the equipment and under the operating conditions described in the Technical Data section of these instructions.

2.1.1 Modifications to the Device

If the device is modified, for example by attaching extra components: Device safety may be affected, or the device may cease to be compliant.

If you have any queries regarding modifications to the device, contact Sartorius.

2.1.2 Repairs to the Device

Device repairs may only be carried out by persons with appropriate specialized knowledge of the device. If the device is **not** repaired by a specialist: The safety of the device may be impaired or the quality marks may lose their validity.

We recommend that any repair work, even that not covered by the warranty, is carried out by Sartorius Service or after consulting with Sartorius Service.

2.2 Personnel Qualification

If people who do **not** have sufficient knowledge on the safe handling of the device carry out work on the device: Those people may injure themselves or other people nearby.

- ▶ Ensure that all individuals working on the device possess the necessary knowledge and qualifications (see Chapter "1.3 Target Groups", page 7).
- ▶ If a particular qualification is required for the actions described: Have these activities carried out by the required target group.
- ▶ If **no** qualification is required for the actions described: Have these activities carried out by the "user" target group.

2.3 Significance of these Instructions

Failure to follow the instructions in this manual can have serious consequences, e.g., exposure of individuals to electrical, mechanical, or chemical hazards.

- ▶ Before working with the device: Read the instructions carefully and completely.
- ▶ If these instructions are lost, request a replacement or download the latest version from the Sartorius website (www.sartorius.com).
- ▶ Ensure that the information contained in these instructions is available to all individuals working on the device.

2.4 Functionality of the Device

A damaged device or worn parts may lead to malfunctions or cause hazards which are difficult to recognize.

- ▶ Only operate the device when it is safe and in perfect working order.
- ▶ Have any damage repaired immediately by Sartorius Service.

2.5 Safety Information on the Device

Symbols, e.g. warnings, safety stickers, are safety information for the handling of the device. Missing safety information may lead to serious injuries.

- ▶ Do **not** conceal, remove, or modify the symbols.
- ▶ Replace the symbols if they become illegible.

2.6 Electrical Equipment

2.6.1 Damage to the Device's Electrical Equipment

Damage to the electrical equipment of the device, e.g. damage to the insulation, can be life-threatening. Contact with parts under voltage represents a direct danger to life.

- ▶ If the device's electrical equipment is defective, disconnect the device from the power supply and contact Sartorius Service.
- ▶ Keep live parts away from moisture. Moisture can cause short-circuits.

2.6.2 Working on the Device's Electrical Equipment

Only Sartorius Service personnel may work on or modify the electrical equipment of the device. The device may only be opened by Sartorius Service personnel.

2.6.3 Power Supply Unit and Power Supply Cable

Serious injury can result, e.g. from electric shocks, if an unsuitable and inadequately dimensioned power supply cable or unsuitable AC adapter is used.

- ▶ Only use the original power supply cable and AC adapter.
- ▶ If the AC adapter or power supply cable must be replaced: Contact Sartorius Service. Do **not** repair or modify the power supply unit or power supply cables.

2.7 Conduct in an Emergency

If there is immediate danger of personal injury or if there is a risk of damage to the device, e.g., due to malfunctions or dangerous situations, the device must be immediately taken out of operation.

- ▶ Disconnect the device from the power supply by disconnecting the power supply cable.
- ▶ Malfunctions should be remedied by Sartorius Service.

2.8 Accessories, Consumables, and Spare Parts

Unsuitable accessories, consumables, and spare parts can adversely affect functionality and safety, and have the following consequences:

- Risk of injury to persons
- Damage to the device
- Device malfunctions
- Device failure

▶ Only use approved accessories and spare parts supplied by Sartorius.
▶ Only use accessories, consumables, and spare parts that are in proper working order.

2.9 Glass Breakage

Glass components can break if they fall or are handled incorrectly.
Glass fragments can cause cuts.

▶ Only lift the device by its base.
▶ When lifting and transporting, ensure that **no** personnel or objects are in the way.
▶ Only operate the operating display with your fingers. Do **not** use pointed or sharp objects.

3 Device Description

3.1 Device Overview

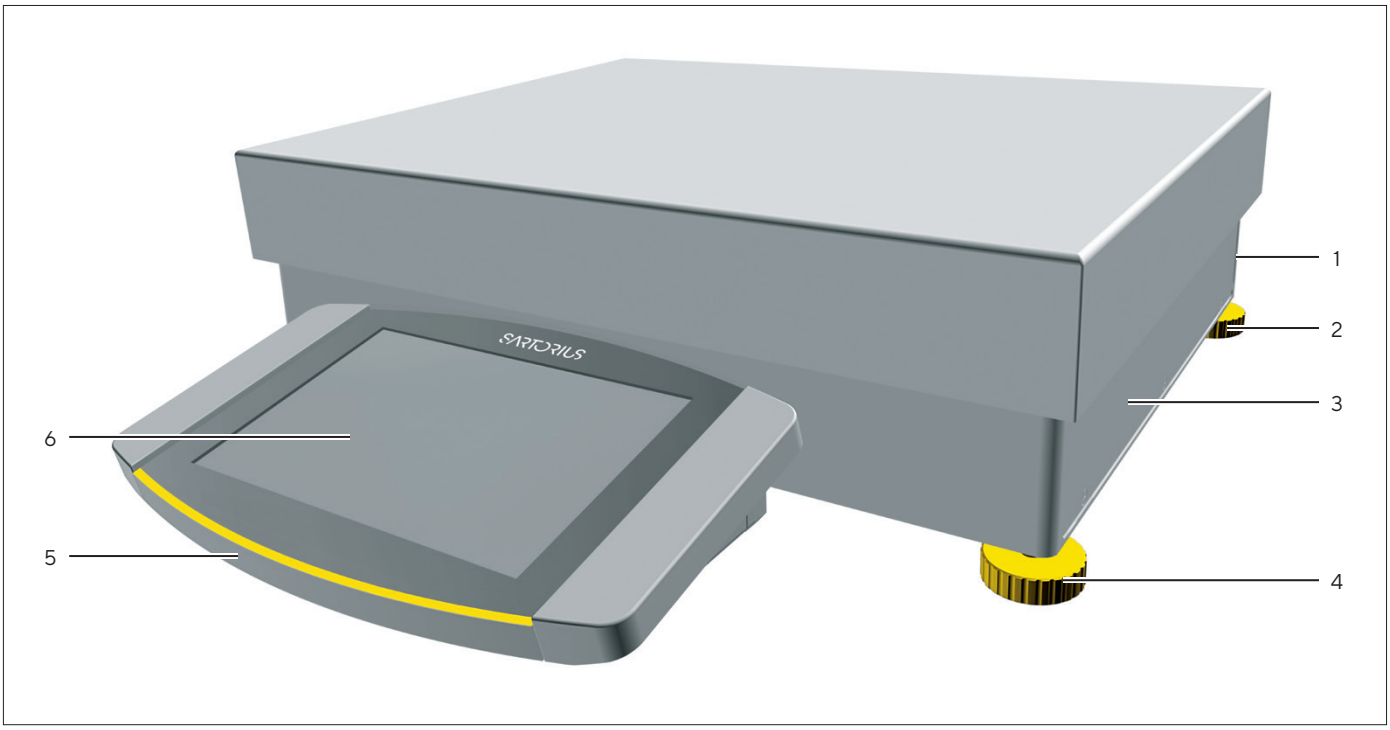

Fig. 1: High-capacity precision balance with a rectangular weighing pan (example)

Pos.	Name	Description
1	Manufacturer's ID label	**Not** depicted
2	Leveling foot	**Not** adjustable, is screwed in for leveling.
3	Weighing module	
4	Leveling foot	Manually adjustable
5	Control unit	
6	Operating display	Touchscreen

3.2 Weighing Pan and Associated Components

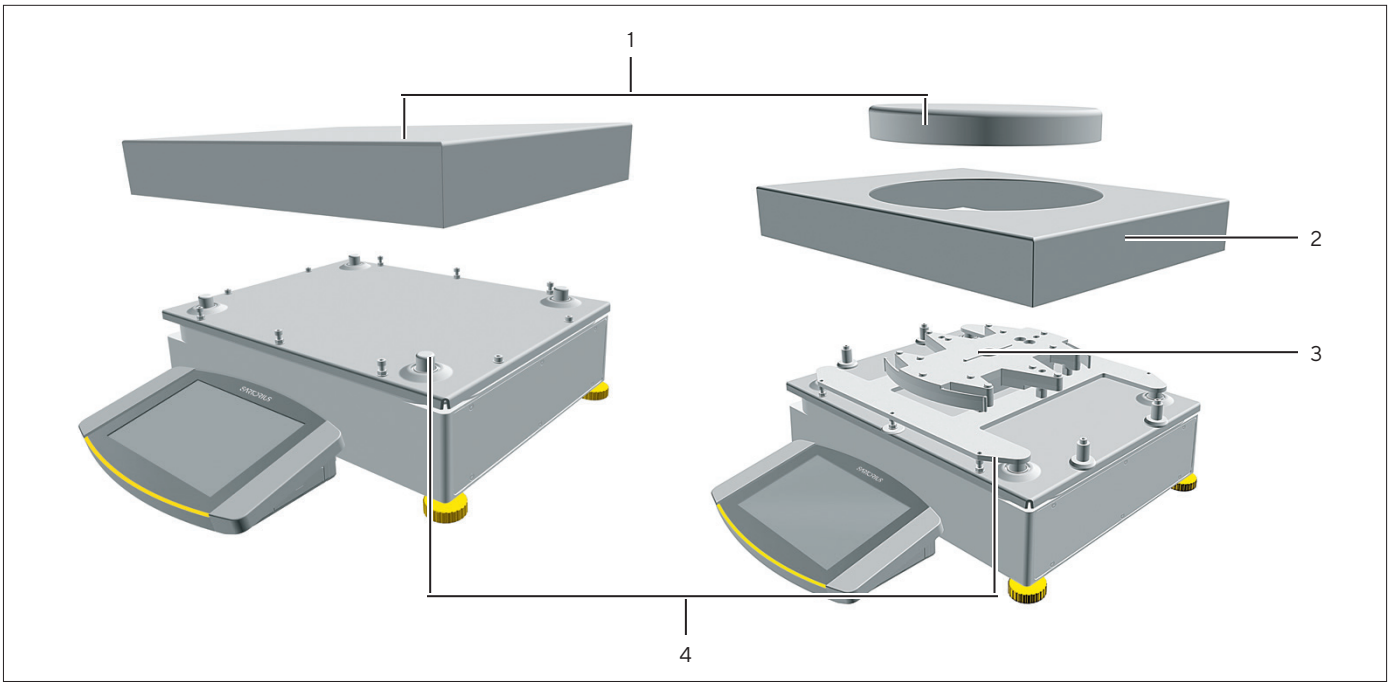

Fig. 2: High-capacity precision balance with a round weighing pan (example)

Pos.	Name	Description
1	Weighing pan	Rectangular or round
2	Shield frame	
3	Pan support	
4	Pan retainer	

3.3 Connections and Components on the Weighing Module

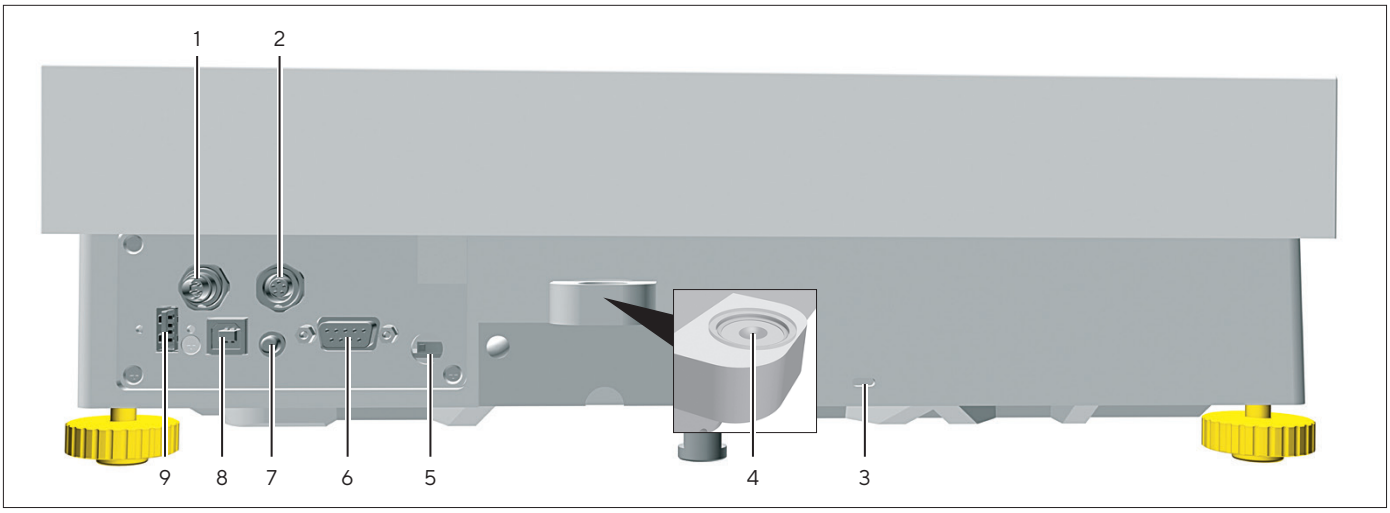

Fig. 3: Connections to the weighing module (example)

Pos.	Name	Description
1	Power supply	For connection to the power supply
2	Peripheral connection	For connecting Sartorius accessories
3	Slot	For attaching a “Kensington” anti-theft device
4	Level	
5	Access switch	Protects the device from changes to the device settings. Is sealed for conformity-assessed devices.
6	COM-RS232 connection	9-pin, for connection to a PC or PLC
7	On key	
8	USB-B connection	For connection to a PC
9	USB-A connection	For USB accessories, e.g. printers, USB mass storage devices, barcode scanners

3.4 Connections on the Control Unit

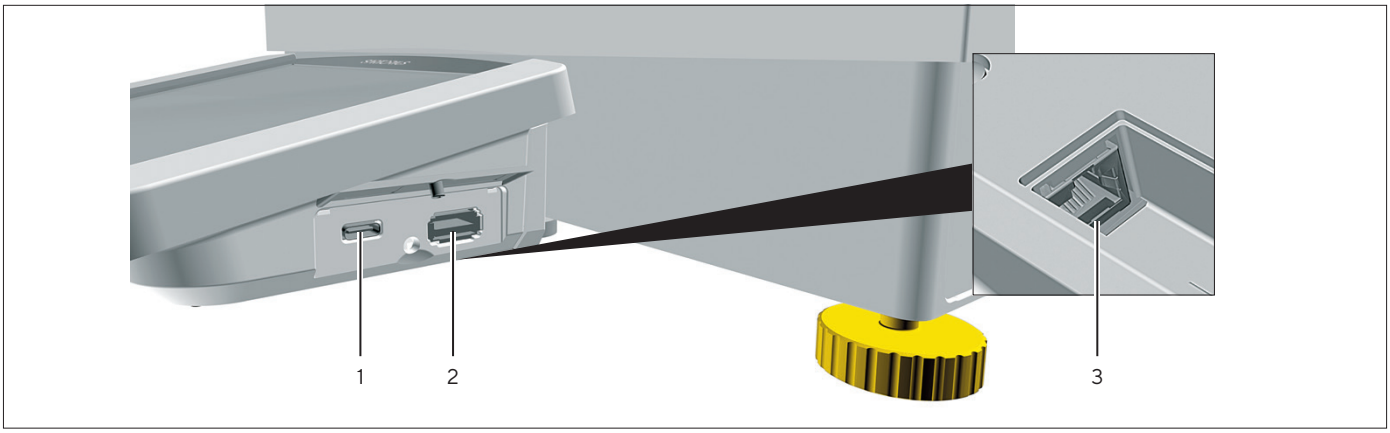

Fig. 4: Connections on the display and control unit (example)

Pos.	Name	Description
1	USB-C connection	For USB mass storage
2	USB-A connection	For USB accessories, e.g. printers, USB mass storage devices, barcode scanners
3	Ethernet connection	For connecting an Ethernet cable

3.5 Safety Equipment

3.5.1 Protective Caps

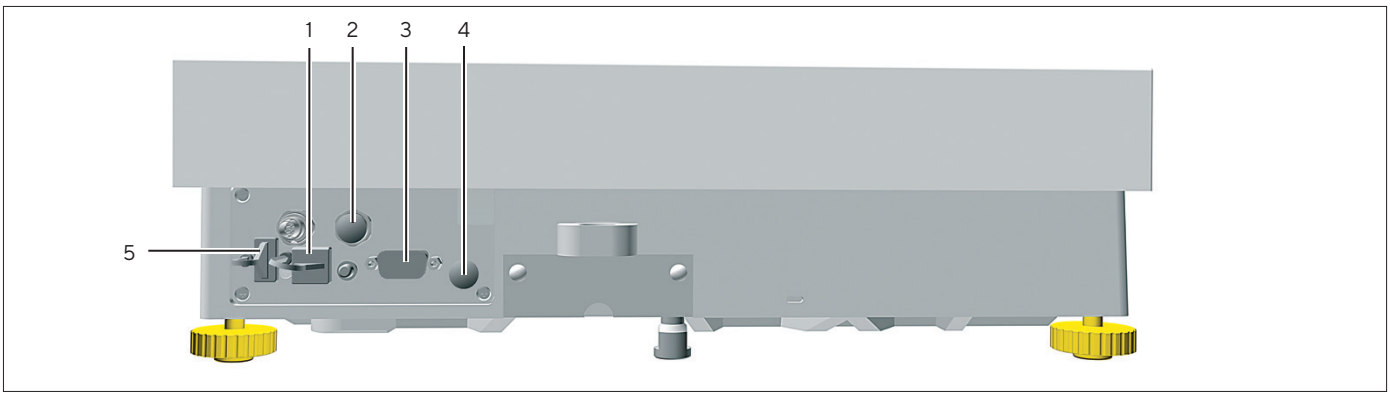

Fig. 5: Connections to the Weighing Module

Pos.	Name	Description
1	Protective cap for USB-B connection	Plastic attachment hood, fastened to the device.
2	Protective cap for peripheral connection	Removable plastic sealing cap.
3	Protective cap for COM-RS232 connection	Removable plastic sealing cap.
4	Protective cap for access switch	Removable plastic sealing cap.
5	Protective cap for USB-A connection	Plastic attachment hood, fastened to the device.

3.6 Conformity-assessed Devices

Some settings of conformity-assessed models are protected against user changes, e.g. “external calibration” for devices in accuracy class II. This measure is intended to ensure the suitability of the devices for use in legal metrology.

3.7 Symbols on the Device

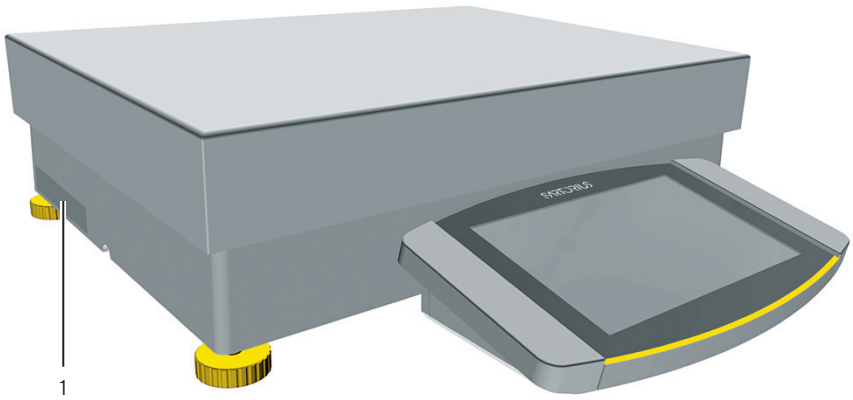

Fig. 6: ID label on the device (example)

Pos.	Designation	Description
1	Manufacturer’s ID label	Displays the metrological data of the device. Conformity-assessed models only

4 Operating Design

4.1 Operating Elements in the Main Menu

Fig. 1: Operating elements in the main menu (example)

Pos.	Name	Description
1	Navigation and function bar	– Enables navigation and searching in menus and lists. – In the “Settings” Menu: Displays the name of the menu.
2	Available tasks	Displays all tasks available for the active user.
3	Function bar	Displays available submenus and operating functions for the current display and current user.
4	Task	Starts the described task.

4.2 Operating Elements in Task Management

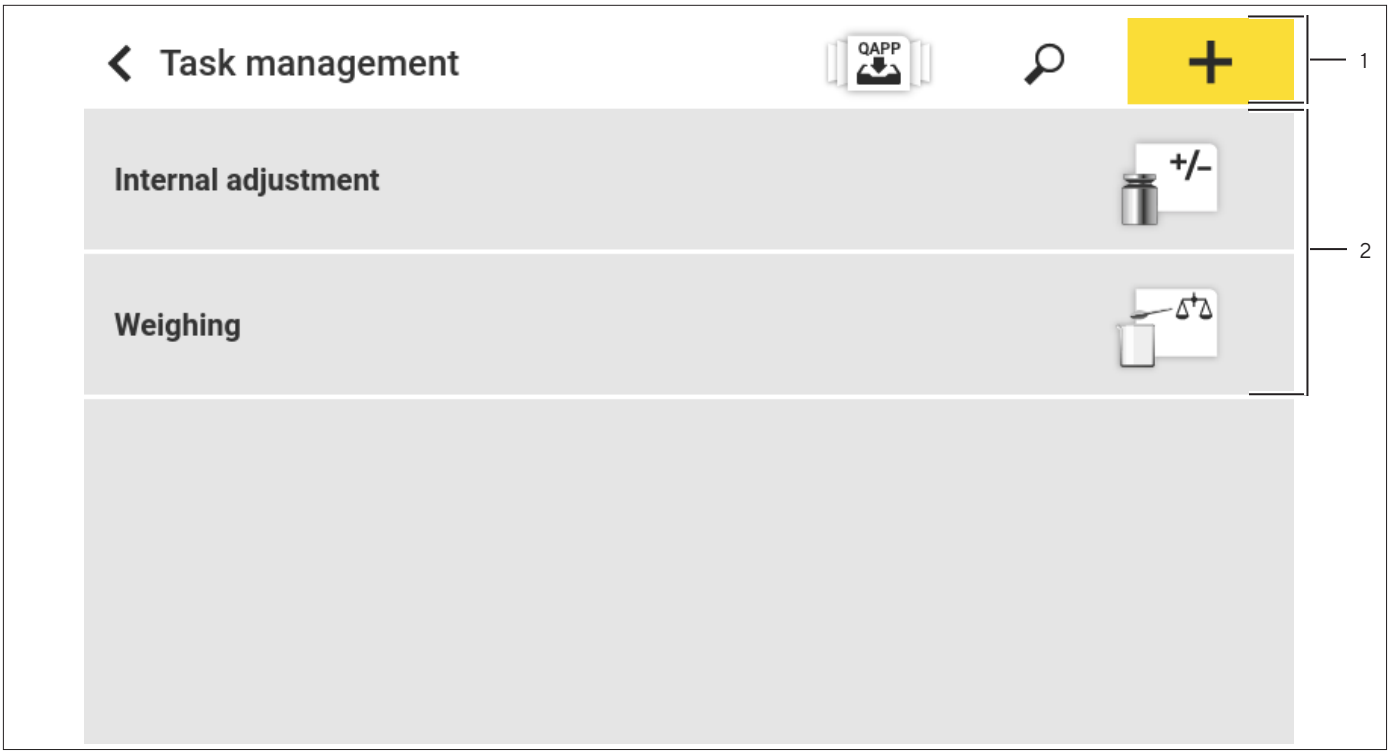

Fig. 2: Operating elements in Task Management (example)

Pos.	Name	Description
1	Navigation and function bar	– Enables navigation and searching in menus and lists. – Enables the addition of tasks. – Opens the QAPP Center. – Displays the name of the menu.
2	Available tasks	– Displays all available tasks. – Opens a summary of the properties for the displayed task.

4.3 Operating Elements in the Weighing Display

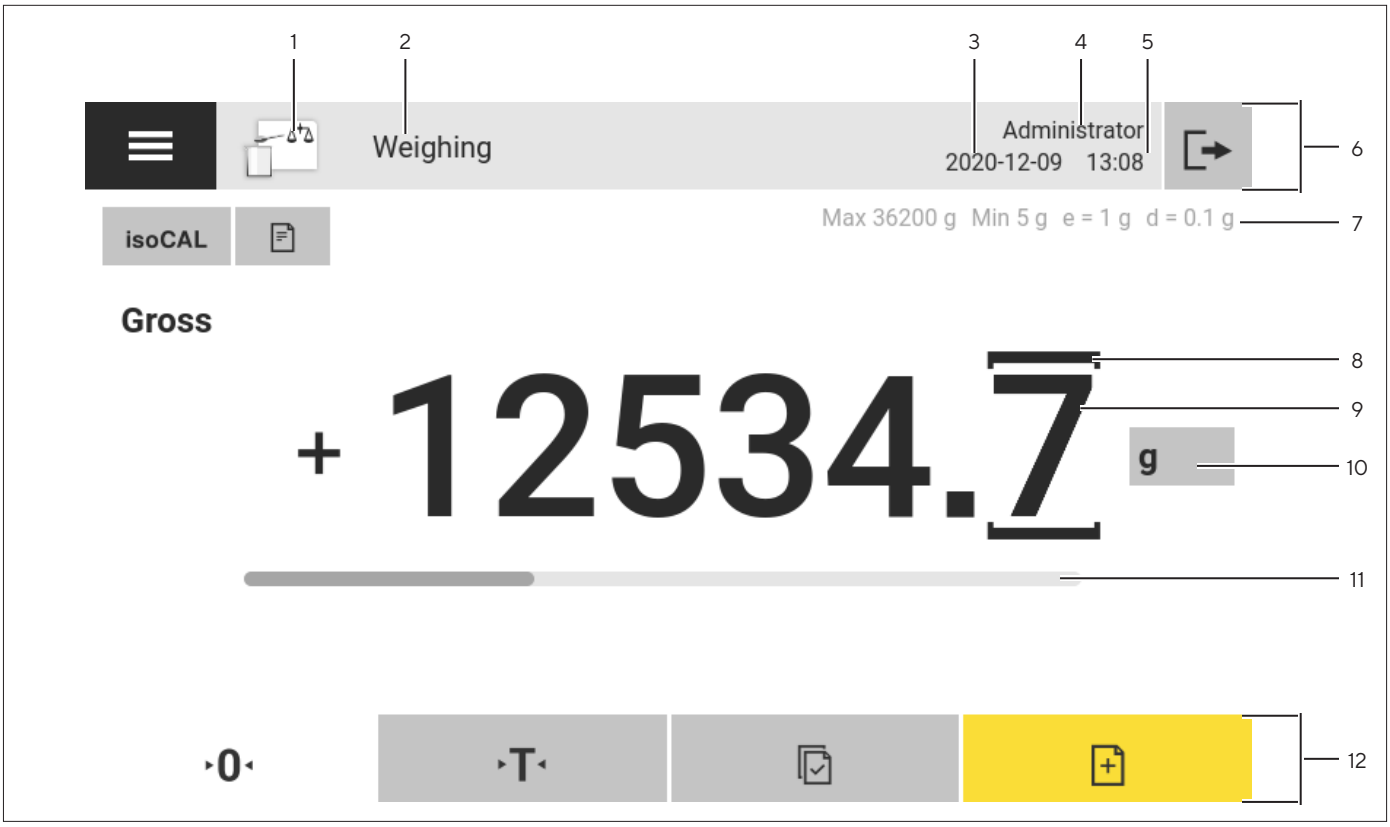

Fig. 3: Weighing display (example)

Pos.	Name	Description
1	Application symbol	Displays the symbol for the active application.
2	Task name	Displays the name of the active task.
3	Date display	Displays the current date.
4	User name	Displays the name of the active user profile.
5	Time display	Displays the current time.
6	Navigation bar	Enables navigation in menus.
7	Metrological data	
8	Labeled points	Labels the differentiated points.
9	Weight value display	In the selected unit and resolution
10	Weighing unit	Displays the selected unit, e.g. grams, [g]. Enables the unit and resolution to be selected.
11	Bar graph	Displays the measured value as a percentage of weighing capacity utilization.
12	Function bar	Displays available operating functions for the current display.

4.4 Advanced Operator Guidance

Advanced applications have advanced operator guidance.

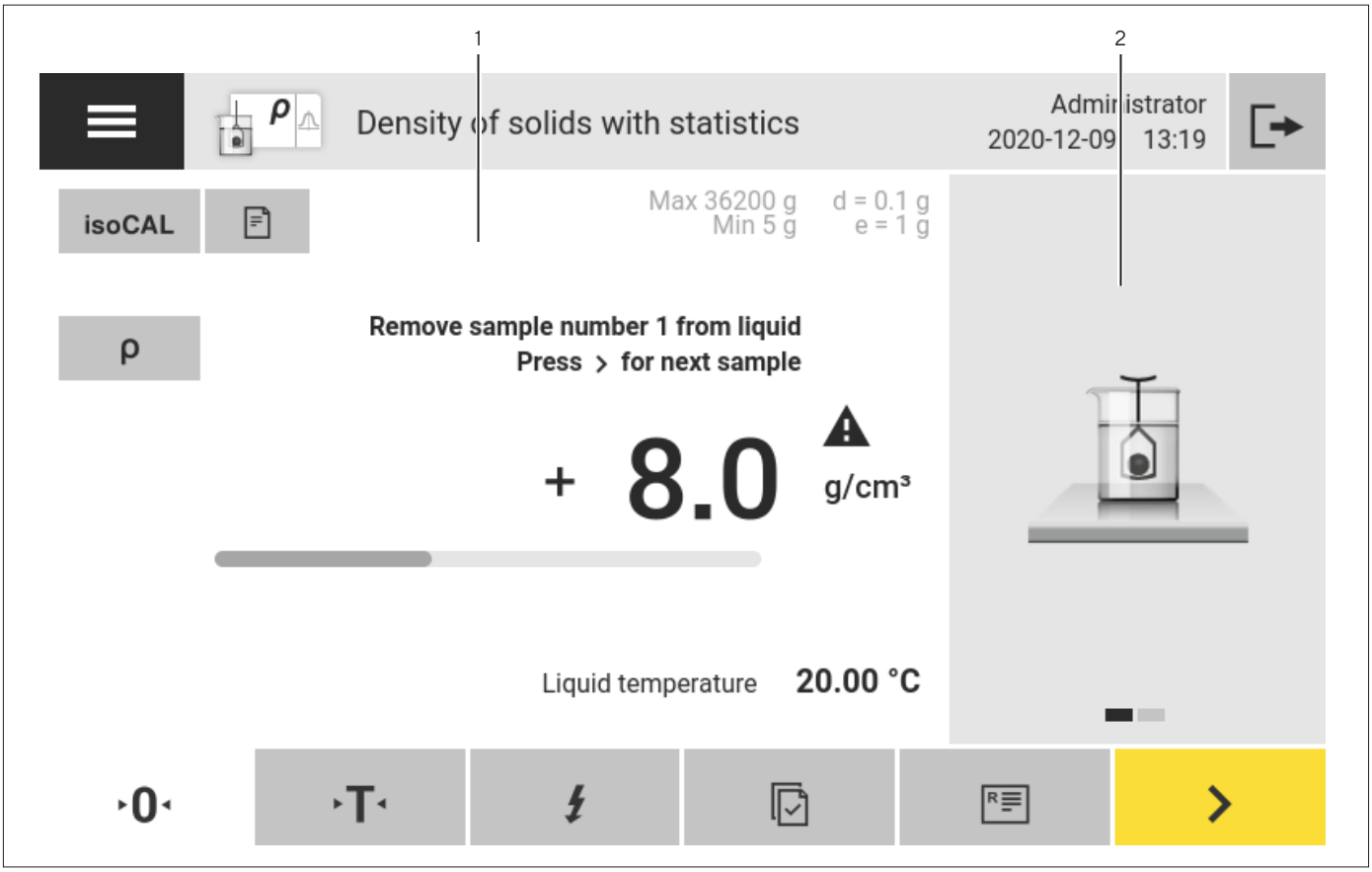

Fig. 4: Advanced operator guidance (example)

Pos.	Name	Description
1	Weighing display with operator guidance	
2	Advanced operator guidance	Guides the user through the active task. Includes 2 or 3 convertible displays depending on the selected application: – First display: Shows the step currently being carried out as a graphic display. – Second display: Shows the current parameters for the task. – Third display, only for applications with statistics function: Represents statistical information as a bar chart.

4.5 Messages

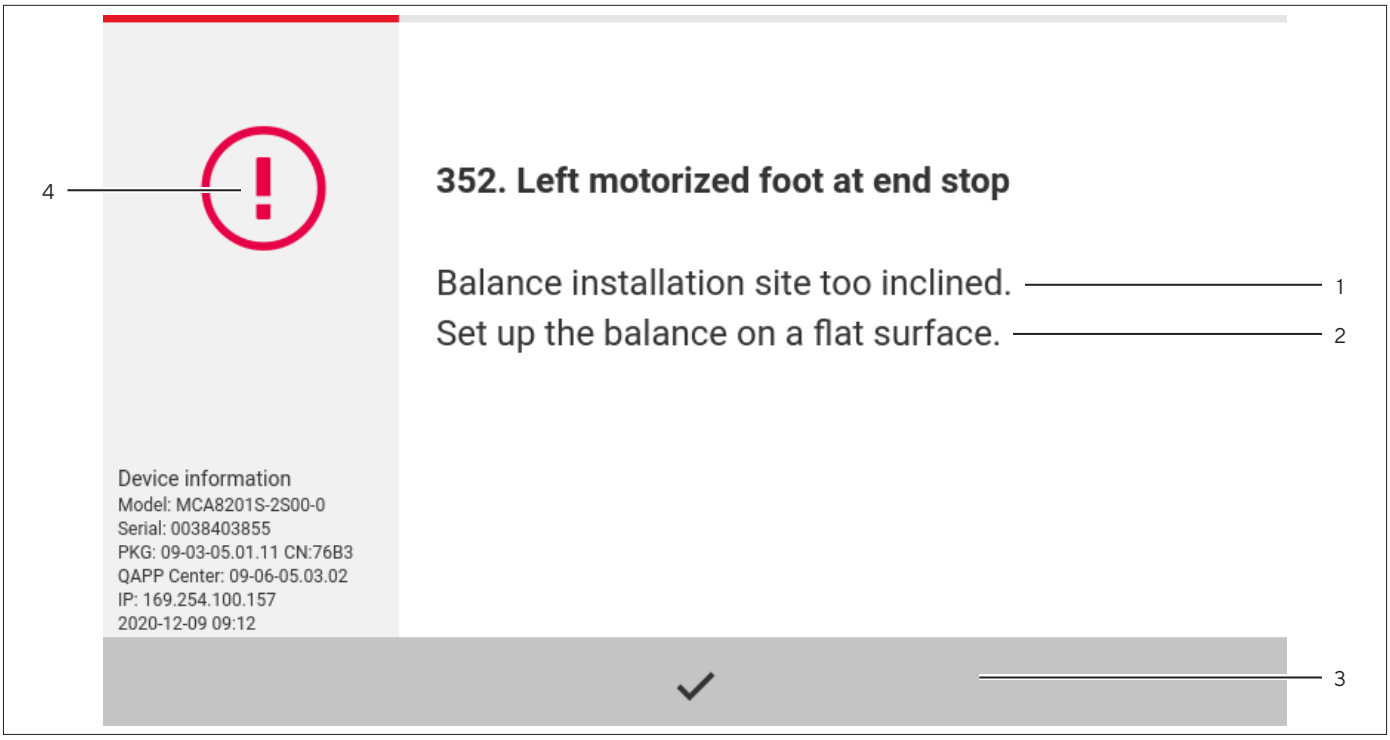

Fig. 5: Error message (example)

Pos.	Name	Description
1	Description	Specifies the cause.
2	Remedy	Specifies the measures necessary to eliminate the cause of the message.
3	Confirm	Confirms and closes the message.
4	Message type	Indicates that the message is a status message, warning message, or an error message.

4.6 Status Center

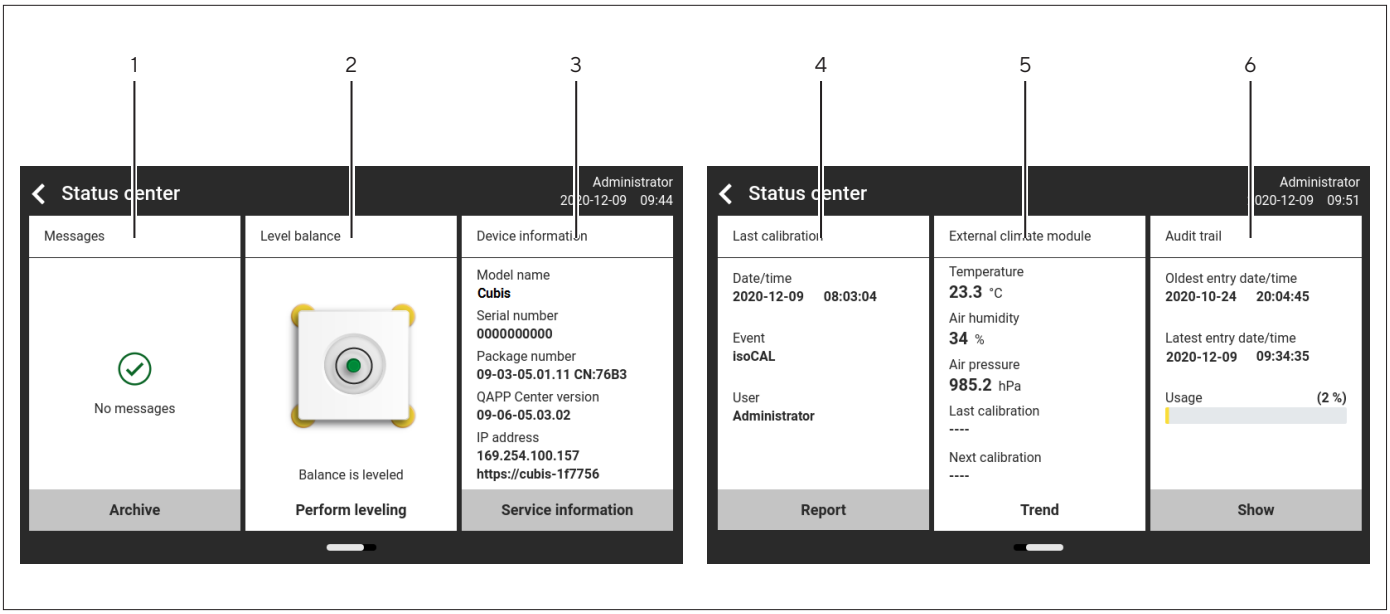

Fig. 6: Status Center (example)

Pos.	Name	Description
1	Messages	Displays information, warning, and error messages.
2	Leveling status	Displays the status of the level.
3	Status for the device	Displays the general device information.
4	Calibration and adjustment report	Displays the data for the last adjustment and calibration.
5	Climate data status	Displays the data from the optional climate module.
6	Audit trail	Displays the oldest and newest audit trail entry and the memory usage in percent.

4.7 Keypad

The keypad is used for entering values in entry fields. If an entry field is activated: The alphanumeric keypad or numerical keypad appears.

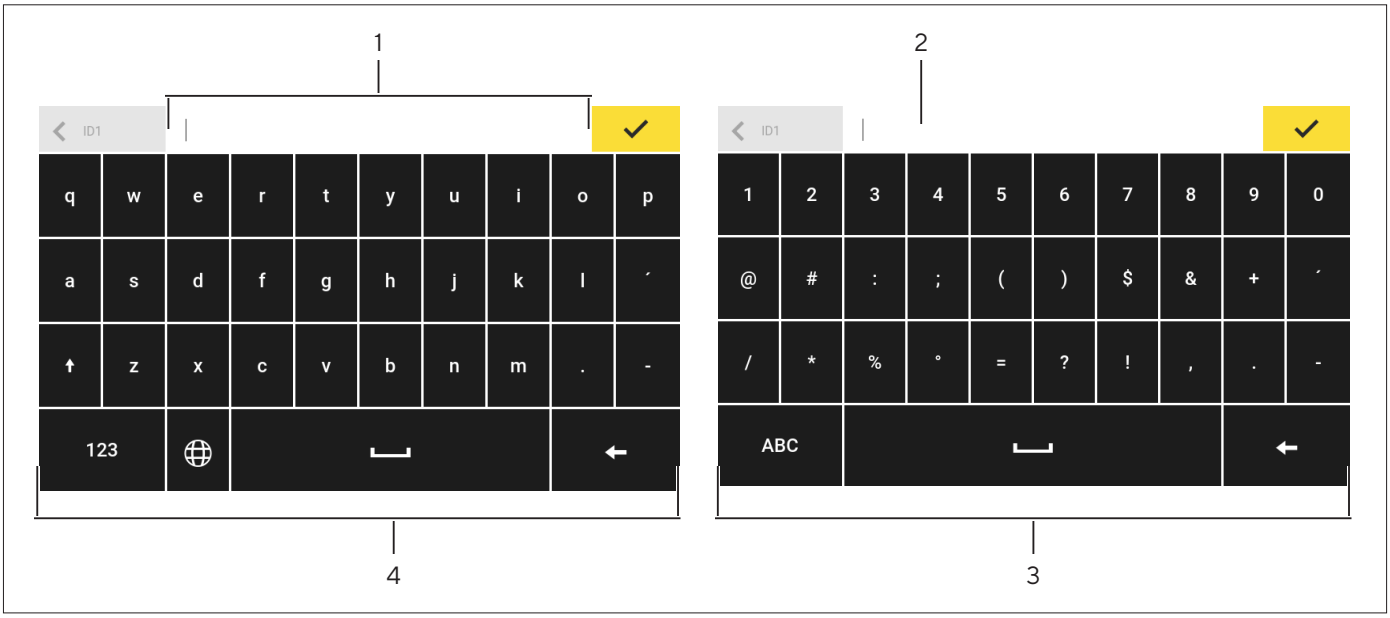

Fig. 7: Alphanumeric keypad and numerical keypad (example)

Pos.	Name	Description
1	Input field	
2	Input assistance	Indicates which values can be entered in the entry field, e.g. only numbers.
3	Numeric keypad	
4	Alphanumeric keypad	

4.8 Status Display of the Buttons

Symbol	Name	Description
	Predominant button	Indicates that the function must be executed. The button is color-highlighted.
	Secondary button	Indicates that the function can be executed. The button is color-highlighted.
	Inactive button	Indicates that the function currently **cannot** be executed. The button is grayed out.

4.9 Buttons in the Operating Display

4.9.1 Buttons for Navigation or Organization in Displays

Symbol	Name	Description
	[Menu] button	Quits the active task and opens the main menu.
	[Back] button	– Returns to the previous display. – In the main menu: Accesses the last-performed task.
	[Search] button	Displays options for browsing tasks and list elements.
	[Filter] button	Displays options for filtering tasks and list elements.
	[Sort] button	Displays options for sorting tasks and list elements.
	[Standby] button	Switches the operating display to standby mode.
	[Task Management] button	Opens Task Management.
	[Status Center] button	Opens the Status Center.
	[Setup] button	Opens the “Settings” menu.
	[User Logout] button	Logs the currently active user out and accesses the login display.
	[User Login] button	Accesses the login display.
	[Next] button	Accesses the next display, e.g. the next processing step for a wizard.
	[Active Search] button	Displays an active search for tasks or list elements.
	[Active Filter] button	Displays an active filter for tasks or list elements.
	[Sort Ascending] button	Sorts tasks or list elements in ascending order.
	[Sort Descending] button	Sorts tasks or list elements in descending order.
<10	[10 Positions Forward] button	Jumps forwards 10 positions in tasks or list elements.

Symbol	Name	Description
10>	[10 Positions Right] button	Jumps 10 positions to the right in tasks or list elements.
Service Information	[Service Information] button	Opens the “Settings” / “Device Settings” / “Device Information” / “Service” menu.
Archive	[Status Archive] button	Opens an overview of all status messages, warning messages, and error messages.
Perform leveling	[Leveling] button	Opens the Leveling Wizard.
	[Warning] button	Opens the list of current warning messages.
	[Error] button	Opens the list of current error messages.
	[Info] button	– Opens a display with additional information about the current menu. – In the Status Center: Opens the list of current status messages.
QAPP	[QAPP Center] button	Opens the QAPP Center.
	[Details] button	Shows additional information about an element.
	[Display Image] button	Displays available images or videos.
	[Close Menu] button	Closes the menu.

4.9.2 Buttons for Editing or Managing Entries

Symbol	Name	Description
+	[New] button	– In Task Management: Starts the wizard for creating a new task. – In Profile Management: Starts the wizard for creating a new weighing or print profile.
	[Activate QAPP] button	Opens the display for activating an application.
✓	[OK] button	Saves a selection or entry.
•••	[More] button	Shows the keypad for entering a user-defined value.
	[Select All] button	Selects all elements of a list.

Symbol	Name	Description
	[Deselect All] button	Deselects the selection for all elements of a list.
	[Cancel] button	– Cancels the current process without saving the changed settings or values. – In the display for editing the print memory: Marks the selected value as invalid.
	[Edit] button	Accesses the Adjustment Wizard for editing the displayed element, e.g. for setting the parameters for a task.
	[Delete] button	Deletes the selected element.
	[User Activated] button	Logs in a deactivated user.
	[User Deactivated] button	Logs out the currently logged-in user.
License	[License] button	Opens the entry field for the license key for activating a QAPP package or application.
	[Keypad] button	Shows the keypad.
	[Select Character Set] button	Accesses the Adjustment Wizard for selecting a character set.
▸ **PT1**	[Show Preset Tare 1 Function] button	Shows the preset tare 1 function.
◂ **PT1**	[Hide Preset Tare 1 Function] button	Hides the preset tare 1 function.
	[Lock] button	Opens the entry field to change the password for the active user.

4.9.3 Buttons for Weighing, Printing, and Export Functions

Symbol	Name	Description
	[Leveling] button	Opens the Leveling Wizard.
isoCAL	[isoCAL] button	Starts the isoCAL function.
Prc	[Result] button	Toggles between the result and weight value display for the current application, e.g. weighing in percent.
▸**0**◂	[Zero] button	Starts zeroing.
▸**T**◂	[Tare] button	Starts taring.

Symbol	Name	Description
▸ T1 ◂	[Tare 1]	Stores the current weight value in the tare 1 memory.
Tare 1 **0.00 g**	[Enter Tare 1]	Opens an entry field for manually entering the tare 1 value.
T1 🗑	[Delete Tare 1]	Deletes the tare 1 memory.
	[Start] button	Starts the selected application.
	[Quit] button	Quits the active application and opens the Print Memory display.
	[Confirm] button	Confirms the current display and initializes the next step.
	[Save] button	Saves the weight value and sends it to the print memory.
	[Print memory] button	Opens the Print Memory display.
	[Print] button	If the Print Memory is displayed: Exports the saved print orders via the integrated data interfaces.
	[Connect] button	Checks the connection to a connected printer and prints a test page.
	[Connector] button	Checks the connection to the respective connector.
g	[Unit change] button	– Toggles between the weight units and the resolution. – Accesses the “Unit change” function menu.
	[Restart] button	If an application is active: Deletes the saved values and restarts the application.
R	[Report] button	If an application is active, e.g. density determination: Displays a report about the progress of the application.
	[Result report] button	If an application is active, e.g. density determination: Displays a report about the result of the application.
	[Export] button	– Creates files depending on the context. – Releases the exported files, e.g., PDF or HTML files, via a connector.
?	[Help] button	Displays descriptions of the menu and parameter contents, e.g., weighing characteristics | functions or printing concept.

4.10 Displays in the Operating Display

Symbol	Name	Description
	[Leveling] display	Indicates that the device is **not** leveled.
	[Print memory] display	Indicates that elements are located in the print memory.
g	[Unit symbol] display	Indicates the set weight unit, e.g. [g] for “grams”.
Gross	[Result] display	Indicates whether the weight value being displayed is a gross value or the result of an application.

	[**Invalid** weight value] display	– Together with the unit:
		The display shows the calculated weight value of an application, e.g. for the “Totalizing” application.
		The displayed weight value is less than the specified minimum initial weight.
		
		– For conformity-assessed devices without unit display:
		  – Negative gross value
		  – The device has **not** yet reached the necessary operating temperature to accurately determine the weight.
		  – The device is **not** leveled.
		  – The device requires the isoCAL function to be executed.

+ –	[Sign] display	Indicates whether the value being displayed is positive or negative.
	[Current page] display	– Indicates that the current display is a multi-page display. – Indicates which page of a multi-page display is being displayed currently.
	[Copy] button	Indicates that data are being copied.
	[Selection] display	Indicates that an entry is selected in a list.
	[Target value] display	Displays the target value in the bar graph display.

4.11 User Management

4.11.1 User Profiles

In the factory, four user profiles are created for the device. One role is assigned to each user profile. Each role has rights to operate the device. The rights assigned to each role depend on which device functions the user has to use. User profiles can be adapted.

Additional user profiles, roles, and rights may be activated in the QAPP Center.

4.11.2 User Login

The user must log in to the login display with a user profile. Various setting options and tasks are displayed in the operating display depending on the user profile and role.

4.12 Weighing and Print Profiles

Weighing and print profiles can be created. These profiles can be assigned to a task.

Preset profiles can be used in a task. The preset profiles can be adjusted individually to the application and saved in new profiles for weighing and printing.

4.13 Tasks and Applications

Device functions such as weighing or calibration and adjustment are carried out using tasks. Applications must be assigned to a task.

A task is visible to all users who are approved for this task.

The device is supplied with some freely accessible applications in the “Essentials” QAPP package which can be used to carry out the most important functions.

Additional applications can be unlocked via the QAPP Center for a fee.

4.14 Menu Structure

4.14.1 Main Menu

▶ Navigating in menus (see Chapter 4.15, page 37).

Level 1	Level 2	Level 3	Description
Task management			Displays all available tasks. Opens a summary of the properties for the displayed task.
	QAPP Center	QAPP package	– Lists the QAPPs contained in a QAPP package. – Displays the licensing status of the QAPPs. – Leads to the input screen for the licensing of the QAPP package.
Status Center			Display information on the device status, e.g. level status.
Settings	Device information		
	User management		
	Access Management		Only available if the “User Management” extension has been licensed in the QAPP Center.
	Timer-controlled actions		
	Weighing and Print Profiles		
	Connections		
	Device settings		
	Device Maintenance		

4.14.2 “Settings” Menu

Depending on the approved applications, the device may display additional menus.

▶ Navigating in menus (see Chapter 4.15, page 37).

Level 1	Level 2	Level 3	Description
Device information	General device information	Manufacturer	Display information about the device’s manufacturer.
		Model name	Display the device’s model name.
		Serial number	Display the device’s serial number.
		Package version	Display the version of the device firmware with check number.
		QAPP Center Version	Display the version of the QAPP Center.
		Balance version	Display the version no. of the balance.
		Draft shield version	If available: Display the draft shield version.
		MCU version	If available: Display the version of the device’s external hardware components.
		Recovery version	Display the data and system no. of the device.
	Service	Service contact	Display the responsible contact at Sartorius Service.
		Telephone number	Display the telephone number for Sartorius Service.
		E-mail	Display the e-mail address for Sartorius Service.
		Hotline	Display the technical hotline for Sartorius Service.
		Contract	Display the responsible contact for maintenance measures.
		Last maintenance	Display the date for the last maintenance.
		Next maintenance	Display the date for the next maintenance.
		Warning time until next maintenance	Display the period until the next scheduled maintenance.
		Maintenance cycle	Display the maintenance cycle.
		Website	Display the website for Sartorius Service.
		Device qualification	Display the qualification date.
	View data storage device		Display, filter, or browse the contents of the data storage device.

Level 1	Level 2	Level 3	Description
Device information	View audit trail		If an audit trail license has been purchased: Display, filter, browse, or export the contents of the audit trail memory.
	Software licenses		Display the list of all open source software modules used.
User management	4 standard user profiles		Display or edit the standard user profiles: User name, description, role, language, user color profile, and login method. If the "User Management" extension has been configured in the QAPP Center: Display or edit additional user profiles, roles, and rules.
Access management	Role management	Four user roles specified	If the "User Management" extension has been configured in the QAPP Center: Define the role names, description, and rights for the roles.
	Rules		If the "User Management" extension has been configured in the QAPP Center: Define the rules for failed attempts at password entry.
	Local password rules		If the "User Management" extension has been configured in the QAPP Center: Define the permissible characters, length, and validity time for the password.
	LDAP server configuration		If the "User Management" extension has been configured in the QAPP Center: Configure the data for device communication with an LDAP server.
Timer-controlled actions	Start task		Display, edit or delete properties for starting the task.
	Display message		Display, edit or delete the message name and content.
	Standby mode		Display, edit or delete execution of the action for standby mode.
	Wake-up from standby		Display, edit or delete the execution time and name for wake-up from standby.
	Switch-off		Display, edit, or delete the execution time for the action.
	Automatic backup		Display, edit, or delete the backup name and properties.
	Export audit trail		Display and select options for export.

Level 1	Level 2	Level 3	Description
Weighing and Print Profiles	Weighing	List of available weighing profiles	Display all available weighing profiles. Edit, create or delete the weighing profiles.
	YDP30	List of available print profiles	Display all available print profiles. Edit, create or delete the print profiles.
	PDF	PDF document on USB	Display all available print profiles. Edit, create or delete the print profiles.
	CSV	Spreadsheet (CSV) on USB	Display all available print profiles. Edit, create or delete the print profiles.
	PC direct	PC direct (USB keyboard emulation)	Display all available PC direct profiles. Edit, create or delete the PC direct profiles.
	SBI direct	SBI print	Display all available SBI direct profiles. Edit, create or delete the SBI direct profiles.
Connections	Connectors	USB	Define the settings for the connected USB stick.
		YDP30-NET	Enter the IP | host address and the parameters for the printer.
		FTP, FTPS	If this extension has been configured in the QAPP Center: The connection to the FTP or FTPS servers facilitates file transfer using the FTP or FTPS protocol.
		Network printer	Enter the IP | host address and the protocol for the network printer.
		SMB	If the "Windows File Server" extension has been configured in the QAPP Center: The connection to a Windows file server facilitates file transfer using a Server Message Block (SMB protocol).
	Network	General settings	Define the device host name.
		Ethernet	Display and edit settings for the device's Ethernet connection.
		Wi-Fi	Display and edit settings for the device's Wi-Fi connection.
	Website | web services	Website access	Determines the settings for the display of the website for the device.
		Remote access	Define the settings for controlling the device remotely.
		Web service password	Define the password for the web services.

Level 1	Level 2	Level 3	Description
Connections	Certificates	Trusted certification authorities	Display and export the trusted certification authorities (CA).
		Device certificates	Display and export the device certificates.
		Trust unknown certification authorities	Specifies the security for unknown certification authorities.
	Interfaces	Serial communication over network	Display and edit the profile for the Ethernet connection.
		COM-RS232 interface	Display and edit the profile for the RS232 connection.
		USB-B interface	Display and edit the profile for the USB-B connection.
	SBI protocol	Format	Configure the settings for the data output and data output format.
		Output	Define whether the output takes place with or without stability.
		Automatic output	Activate or deactivate the output rate for automatic data output.
		Display SBI error messages	Activates or deactivates the error messages for the SBI protocol.
		Formatting output values	Defines the line length for the data output.
	Climate modules	List of connected climate modules	Define the settings for the connected climate module.
	Connected devices	Motion sensor	Define the number and functions of the gestures. Only available if a motion sensor is connected to the device.
		External USB keys	Triggers key functions for the device via an externally connected peripheral device, e.g. a keyboard or a foot switch.
Device settings	Date and time	NTP configuration	Activate or deactivate time synchronization via NTP.
		Set the date and time	Enter a date and time. Determine the time zone.
	Safe weighing	isoCAL execution mode	Set the isoCAL function.
		Safety level	Set the alert level for the message indicating that the isoCAL function must be executed.

Level 1	Level 2	Level 3	Description
Device settings	Preload	Set preload	Sets a preload for technical equipment that needs to be constantly on the device. In this case the maximum capacity is reduced by the set preload.
		Delete preload	Deletes the set preload.
	Calibration | adjustment report	Automatic printout for isoCAL	Activates the data output for the isoCAL function.
		Automatic printout for cal. | adj. Task	Activates the data output for the calibration and adjustment function.
		Print profile	Defines the output device on which a printout must be carried out.
	minUSP	minUSP function	If this extension has been activated in the QAPP Center: Activate or deactivate the minimum initial weight.
		Starting point of operating range	If this extension has been activated in the QAPP Center: Define the starting point value.
		Mark weight values < minUSP as invalid	If this extension has been activated in the QAPP Center: Activates the identification of weight values that are less than the minimum initial weight.
	Measurement uncertainty	Various user entries	If this extension has been configured in the QAPP Center: Activates the dynamic display of the measurement uncertainty for the weight value.
	Device ID	Device ID 1–2	Determine the device identifier.
	Electronic signature	Sign report	If the QAPP extension has been activated: Activate or deactivate the electronic signature.
	Start-up behavior	Initial zeroing | taring	Activate or deactivate automatic zeroing and taring when starting the device.
		Automatic login	Activate or deactivate automatic log-in of the last user when starting the device.
		Automatic start of last task	Activate or deactivate automatic start of the last task when starting the device.

Level 1	Level 2	Level 3	Description
Device settings	Display settings	Display brightness	Define the brightness of the operating display.
		On | off switch	Activate or deactivate the “energy saving” function.
		Color scheme	Define the settings for the operating display color scheme if this extension has been configured in the QAPP Center.
	Sound (loudspeaker)	Touch sounds	Activate or deactivate the acoustic signal when operating a button.
		Message sounds	Activate or deactivate the acoustic signal for messages.
		Sound for end-of-action	Activate or deactivate the acoustic signal for the end of an action.
Device Maintenance	Update firmware	List of connectors and then list of firmware	– Starts a firmware update. – **Not** for conformity-assessed devices.
	Install QAPP Center	List of connectors and then list of QAPP Centers	Updates the QAPP Center using the selected connector.
	Install customized QAPP	List of connectors and then list of customized QAPPs	Updates a customized QAPP using the selected connector.
	Device data backup	List of connectors	Saves the device data on the selected connector.
	Restore device data	List of connectors	Loads saved device data from the selected connector.
	Export device data	Role management	Saves device role management for an administrator, user, or guest on the selected connector.
		User management	Saves device user management for an administrator, user, or guest on the selected connector.
		Export overview	Displays the list of connectors, e.g., a server or connected USB stick.
	Import device data	List of connectors for import	Loads the device data with role and user management, e.g., from a server or connected USB stick.
	Reset to factory settings	Restore factory settings	– Resets the device to factory settings and deletes all configurations. – The audit trail and data memory will be retained.
	Create diagnostic file		Save information about the device configuration and the ongoing operation on a connected USB stick.

4.15 Navigating the Menus

Procedure

▶ To open a menu from the main menu: Tap on the desired menu button in the function bar.

▷ The menu opens and the name of the open menu is displayed in the navigation bar.

▶ To return to the main menu from other displays: Press the [Menu] button or press the [Back] button (multiple times) until the main menu is displayed.

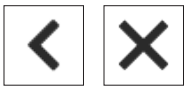

▶ To exit a display: Press the [Back] or [Cancel] button.

▶ To scroll through the tasks available in the main menu: Swipe the task bar to the left or right.

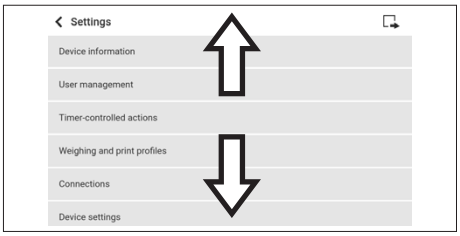

▶ To scroll through the list of options in an administration menu (settings, tasks, applications, ...): Swipe the list downwards or upwards.

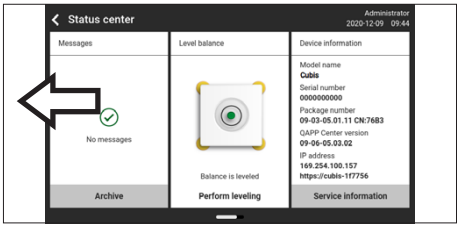

▶ To display the next page in a display containing several pages, e.g. in the Status Center: Swipe the display to the left.

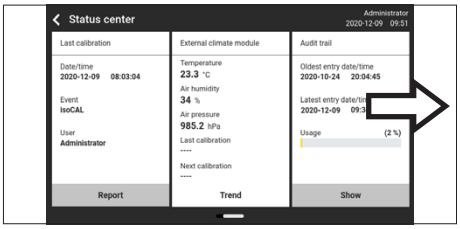

▶ To display the previous page in a display with several pages: Swipe the display to the right.

- ▶ If a value needs to be selected from a list:
  - ▶ Scroll to the desired value in the display. In order to do so, swipe the display upwards or downwards.
  - ▶ Press the desired value.
  - ▶ To confirm the selection: Press the [OK] button.
- ▷ The selected value is saved and the list closes.

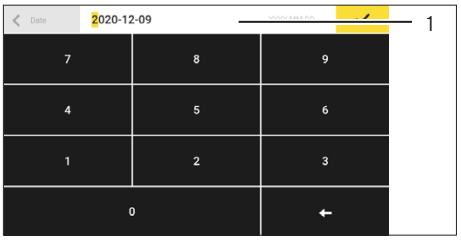

- ▶ If elements from a display need to be filtered or a display needs to be browsed:
  - ▶ Press the [Search] or [Filter] button.
  - ▷ The keypad is displayed.
  - ▶ Type the searched value or value to be filtered into the entry field (1) using the keypad.
  - ▶ Press the [OK] button.
- ▶ To close the entry field for searching and filtering without starting a search or filter operation: Do **not** enter a value in the entry field or delete the entered value.
  - ▶ Press the [OK] button.

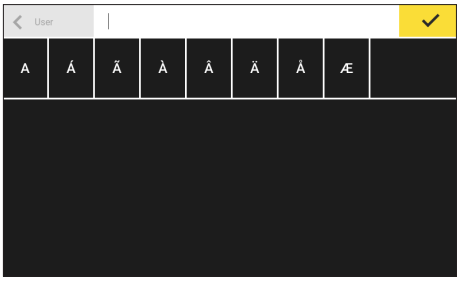

- ▶ If language-specific characters need to be entered using the keypad:
  - ▶ Press and hold a letter on the keypad.
  - ▷ If language-specific characters are available for the letter being pressed: A display opens containing all the language-specific characters available for the letter being pressed.
  - ▶ To select a language-specific character and return to the keypad display: Tap on the desired language-specific character.

5 Installation

5.1 Scope of Delivery

Item	Quantity
Device	1
Weighing pan	1
High-capacity precision balance with a round weighing pan: Shield frame	1
High-capacity precision balance with a round weighing pan: Pan support	1
Power supply unit	1
Country-specific power supply cable with test seal	1
USB connection cable	1
In-use dust cover for control unit	1

5.2 Selecting an Installation Site

Procedure

▶ Make sure that the following conditions are met at the installation site:

Condition	Features
Ambient conditions	Suitability tested (see Chapter "15.3 Ambient Conditions", page 90)
Setup surface	Stable, even surface that is not exposed to vibrations
	Not directly against a wall
	Sufficiently dimensioned for the device and the peripheral devices (device space requirements see Chapter "15.1 Dimensions and Weight", page 89; peripheral device space requirements see instructions for the peripheral devices, e.g. printer)
	Sufficient load-bearing capacity for the device and the peripheral devices even when full (device weight see Chapter "15.1 Dimensions and Weight", page 89; weight of the peripheral devices see instructions for the peripheral devices, e.g. printer)
Access	Barrier-free

5.3 Unpacking the Device

Procedure

- ▶ Unpack the device at the intended installation location.
- ▶ Lift the device in the Styrofoam padding out of the packaging.
- ▶ Place the device in the Styrofoam padding on its side.
- ▶ Lift the Styrofoam padding off the device.
- ▶ Place the device on its base.
- ▶ Keep all parts of the original packaging, e.g. to return the device.

5.4 Removing the Control Unit

The control unit can be removed. This enables the flexible setup of the control unit at the workplace.

Tool:	1 Torx Allen key, T20
Material:	1 soft support base

Requirements

The weighing pan and all associated components are **not** placed on the device.

Procedure

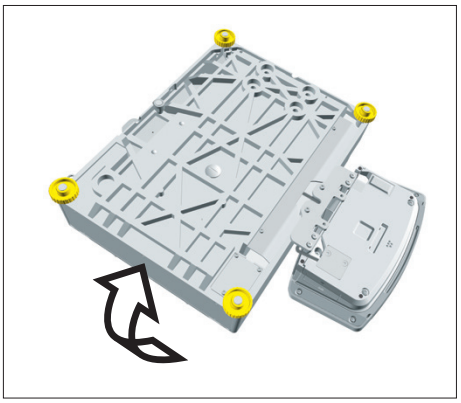

- ▶ Turn over the device and place on a soft surface.

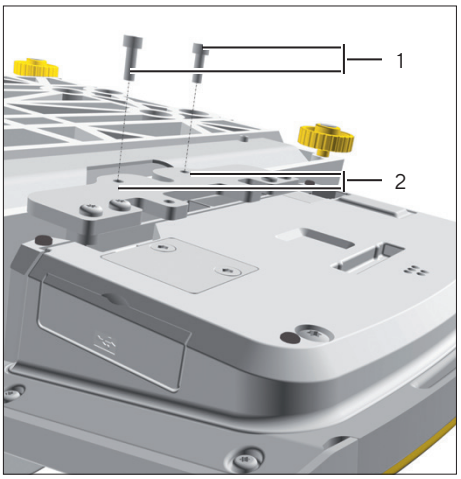

- ▶ To loosen the control unit's retainer: Use the Torx Allen key to remove both screws (1) from the thread (2).
- ▶ Remove the control unit and re-insert both screws into the threaded holes.

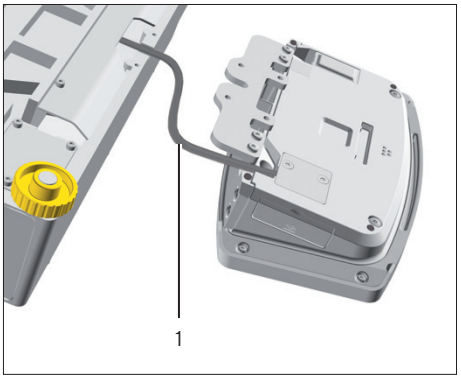

▶ Pull the connection cable (1) between the control unit and the weighing module out of the control unit's retainer and unroll it.

▶ Turn the device over and place it on an even surface.

5.5 Connecting the Ethernet Cable

Material: 1 Ethernet cable

1 soft support base

Requirements

The weighing pan and all associated components are **not** placed on the device.

Procedure

▶ If the control unit is attached to the weighing module: Turn over the device and place on a soft surface.
▶ If the control unit is removed from the weighing module: Turn over the control unit and place on a soft surface.
▶ Remove the cover (1) of the Ethernet connection socket on the underside of the display and control unit.
▶ Plug the Ethernet cable into the Ethernet connection socket.
▶ Place the device back on the device base on a level surface.

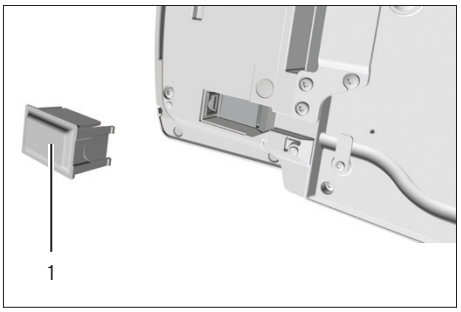

5.6 Preparing Below-balance Weighing

The device can be configured for below-balance weighing. Samples can be suspended for weighing using below-balance weighing, e.g. samples, which do **not** fit on the weighing pan.

For below-balance weighing, the hook must be installed in the device base and the device set up on a weighing table with recess.

M

In legal metrology:

– The below-balance weighing equipment may **not** be used.
– The cover of the below-balance weighing equipment may **not** be opened.

Tool:	1 suitable screwdriver
Material:	1 hook for below-balance weighing, available as an accessory from Sartorius
	1 soft support base
	1 draft protection shield
	1 weighing table with recess

Requirements

The weighing pan and all associated components are **not** placed on the device.

Procedure

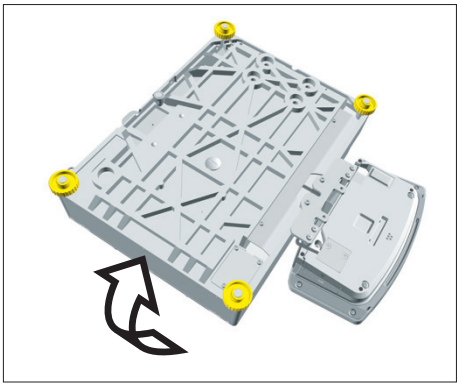

▶ Turn over the device and place on a soft surface.

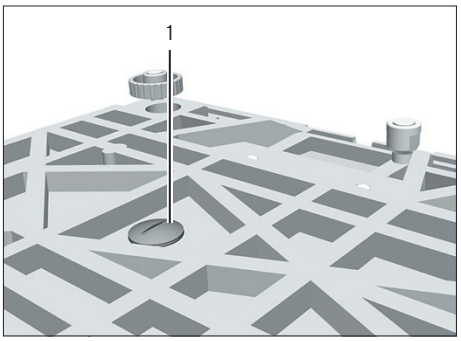

▶ Unscrew below-balance cap (1) at the device base with a suitable screwdriver.

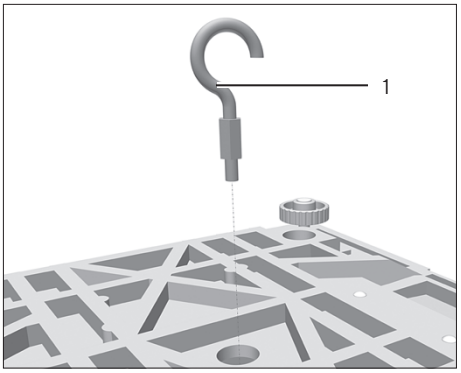

▶ **NOTICE** Damage to the device from cross-threading! Ensure that the hook for below-balance weighing (1) is inserted straight into the thread.

▶ Set up the device on the weighing table with recess. The hook for below-balance weighing may **not** touch the floor.
▶ Install the draft protection shield.

5.7 Positioning the Weighing Pan and Associated Components

Install Device with a Rectangular Weighing Pan

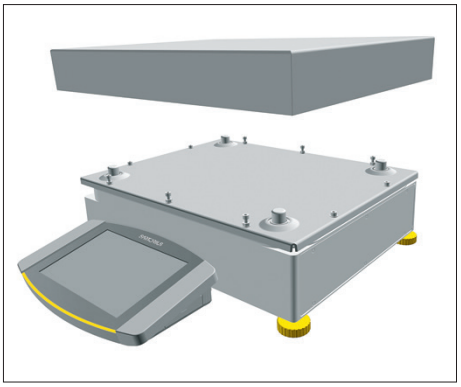

Procedure

▶ Place the weighing pan on the weighing module.

Install Device with a Round Weighing Pan

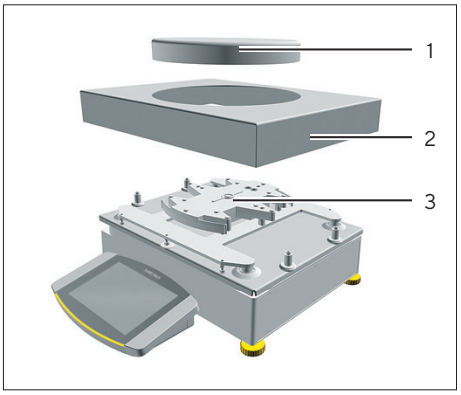

Procedure

▶ Place the shield frame (2) on the weighing module.
▶ Place the weighing pan (1) onto the pan support (3).

5.8 Acclimatization

When a cold device is brought into a warmer area: The temperature difference can lead to condensation of humidity in the device (moisture formation). Moisture in the device can lead to malfunctions.

▶ Allow the device to acclimatize for approx. 2 hours at the installation site. The device must be disconnected from the power supply beforehand.

6 Getting Started

Procedure

- ▶ **NOTICE** Improper connection may damage the device! If the device is connected using electronic components, e.g. printer, PC: The device must be disconnected from the power supply. Ensure that the device is disconnected from the power supply.
- ▶ Connect the device using electronic components (see electronic components instructions).

6.1 Installing the AC Adapter

Procedure

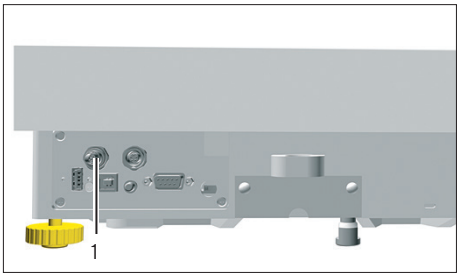

- ▶ Plug the DC supply cable of the AC adapter into the device's "power supply" (1) connection socket and tighten the threaded fitting.

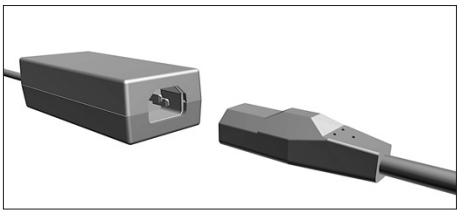

- ▶ Connect the power supply cable to the AC adapter connection.

6.2 Connecting the Power Supply

Procedure

- ⚠ **WARNING** Severe injuries caused by using a defective power supply cable! Check the power supply cable for damage, e.g., cracks in the insulation.
  - If required: Contact Sartorius Service.
- Check whether the country-specific power plug matches the power connections at the installation site.
  - If required: Contact Sartorius Service.
- **NOTICE** Damage to the device due to excessive input voltage! Check whether the voltage specifications on the AC adapter match those of the power supply at the installation site.
  - If the input voltage is too high: Do **not** connect the device to the power supply.
  - Contact Sartorius Service.
- Connect the mains plug of the power supply cable to the wall outlet at the installation site.
- ▷ The [Booting device...] display appears in the operating display.
- ▷ The [Starting system...] display appears in the operating display.
- ▷ The [Starting application...] display appears in the operating display.
- ▷ The [Loading] display appears in the operating display.
- ▷ The device performs an initial tare function.

6.3 Attaching the Protective Caps

If connections of the device are **not** being used during operation:
The connections must be sealed with the protective caps supplied.

Procedure

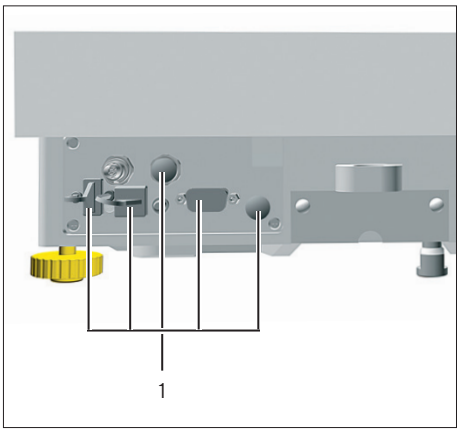

- Check whether all unused connections have been sealed with a protective cap.
- Place the protective caps (1) for the electrical connections on the unused connections.

7 System Settings

7.1 Performing System Settings

Default settings can be adjusted for the device and the applications in order to align with the ambient conditions and individual operating requirements.

The following settings are necessary to operate the device together with connected components:

- Set up the communication of the connected devices
- Set up additional components

The following settings are recommended to set up the device:

- Set the menu language
- Select date | time format
- Setting the date, time, and time zone
- Assigning a password
- Set the behavior of the isoCAL function

Procedure

▶ Open the main menu.
▶ Press the [Setup] button.
▶ To adjust settings: Open the desired submenu.
▶ Select the desired configuration value (configuration values, see Chapter "7.7 Parameter List", page 51).
▶ Exit the menu.

7.2 Switching Off the isoCAL Function

M

If the isoCAL function is switched off for a conformity-assessed device: The device can only be used for legal-for-trade applications in restricted temperature ranges (see Chapter "15.3.2 Ambient Temperature for the isoCAL Function", page 91). The isoCAL function **cannot** be switched off for all model versions.

Procedure

▶ In the "Settings / Device Settings / Safe Weighing / isoCAL Execution Mode" menu, for the "isoCAL function" parameter, select the "Off" configuration value.

7.3 Assigning a Password

Procedure

▶ Log into the device using the user profile for which a password needs to be assigned.
▶ Open the “Settings / User Management” menu.
▶ Press the [Lock] button.
▷ The user password input field is displayed.
▶ Enter the desired password in the entry field and confirm with the [OK] button.

7.4 Opening the Help Function

Help texts can be called up for the following submenus during the system settings:

- User management
- Printing concept
- Network connection
- Weighing characteristics and weighing function
- Timer-controlled actions

The help functions have a full text search and are equipped with links.

Procedure

▶ Open the “Settings / User Management” menu.
▶ Press the [Help] button.
▷ The help texts are displayed, e.g., for the “User management”.
▶ Change the structure: Press the [Info] button.
▶ Export the help text as a PDF file: Press the [Export] button.

7.5 Setting Up Device for Network Printer

7.5.1 Selecting Configuration for Network Printing

Two configurations are possible:

- The device and the network printer communicate via an independent Wi-Fi network with standard Wi-Fi components. No security guidelines or network settings need to be taken into consideration here.
  This configuration is recommended if no other network functions are being used and simple printing is enough.

- The device communicates with a company network via Wi-Fi.
  The network printer is connected to the company network. All the device's network functions can be used in the entire company network. This configuration has 2 restrictions:
  - The company network must have a DHCP server.
  - Login via Wi-Fi only supports standard authentication methods and no special security guidelines. This connection **cannot** be used in company networks that require special security guidelines.

Procedure

▶ Check which configuration is suitable for network printing.

7.5.2 Setting Up Device for Network Printer via Independent Wi-Fi Network

Requirements

- The device administrator or service rights are activated via user management.
- The network printer is connected to a Wi-Fi router.

Procedure

▶ Check the suitability of the Wi-Fi router and Wi-Fi stick (for suitability, see Chapter "16.1.1 Printers and Communication", page 96).
▶ Insert the Wi-Fi stick into the device in a USB connection.
▶ Open the "Settings / Connections / Network / Wi-Fi" menu.
▶ Press the [Edit] button.
▶ Enter the service set identifier for the router under "Wi-Fi SSID".
The service set identifier is specified on the back of the Wi-Fi router.
▶ Enter the router password under "Wi-Fi password". The password is specified on the back of the Wi-Fi router.
▶ Press the [Back] button.
▷ The status "Ready" appears in the "Wi-Fi" overview display within 10 seconds.

Creating a Network Printer

Procedure

▶ Open the "Settings / Connections / Connectors / YDP30-NET" menu.
▶ Press the [New] button.
▶ Enter a name for the network printer under "Connector name", e.g., printer YDP30-NET.
▶ Enter the network printer IP address under "IP or host". The IP address is specified in the network printer "Network Settings" printout.
▶ Confirm the entries. In order to do so, press the [OK] button.

7.5.3 Setting Up Device for Network Printer via Company Network

Requirements

- The device administrator or service rights are activated via user management.
- The company network has a DHCP server.
- The network printer is connected to the company network.

Procedure

▶ Open the “Settings / Connections / Network / Wi-Fi” menu.
▶ Press the [Edit] button.
▶ Enter the service set identifier for the company network under “Wi-Fi SSID”. The service set identifier is available from the company network administrator.
▶ Enter the company network password under “Wi-Fi password”. The password is available from the company network administrator.
▶ Press the [Back] button.
▷ The status “Ready” appears in the “Wi-Fi” overview display within 10 seconds.

Creating a Network Printer

Procedure

▶ Open the “Settings / Connections / Connectors / YDP30-NET” menu.
▶ Press the [New] button.
▶ Enter a name for the network printer under “Connector name”, e.g., printer YDP30-NET.
▶ Enter the network printer “HOST NAME” under “IP or host”. The HOST NAME is specified in the network printer “Network Settings” printout.
▶ If connection with the host name is delayed: Enter the network printer IP address under “IP or host”. The IP address is specified in the network printer “Network Settings” printout.
▶ Confirm the entries. In order to do so, press the [OK] button.
▶ If the IP address changes depending on the DHCP network settings: Enter the new IP address of the network printer again.

7.5.4 Configuring Print Profiles

Procedure

- ▶ Open the “Settings” / Weighing and Print Profile / YDP30” menu.
- ▶ Edit a pre-configured print profile or create a new print profile by pressing the [New] button, e.g., network printer YDP30-NET.
- ▶ Follow the wizard’s instructions in the operating display for more settings.
- ▶ Confirm the entries. In order to do so, press the [OK] button.
- ▶ Add the created print profile to a task (see Chapter “8.5 Adding Weighing and Print Profiles to a Task”, page 75).

7.6 Descriptions of Interface Protocols and Website Certificates

The descriptions of the following interface protocols are available as PDF files in English and German:

- SBI protocol
- SICS protocol
- miniSICS protocol

A description on installation for a website certificate is available as a PDF file in English entitled “Installation Instructions for Website Certificate”.

These PDF files are available to download under “Cubis® II MCA Firmware” via the Sartorius website www.sartorius.com.

7.7 Parameter List

7.7.1 Parameters in the “User Management” Menu

Parameter	Setting Values	Explanation
User name	User input	Assign a name for the user profile.
User description	User input	Enter a description for the user profile.
Role	Administrator	If the QAPP extension “User Management” has been activated: Activates the administrator functions.
	User*	If the QAPP extension “User Management” has been activated: Activates the user functions.
	Guest	If the QAPP extension “User Management” has been activated: Displays the guest functions. Activates the guest via the [User Activated] button.
Language		Set the language for the user profile.
User color profile	Sartorius Standard*	If the QAPP extension “Color Scheme” has been activated: Define a user color for the user profile.
Login method		Determine whether the user password is saved locally on the device or provided by an LDAP network server.
* Factory setting		

7.7.2 Parameters in the “Access Management” Menu

Parameter	Setting Values	Explanation
Role management	Administrator	If the QAPP extension “User Management” has been activated: Define the role names, description, and rights for the administrator.
	User	If the QAPP extension “User Management” has been activated: Define the role names, description, and rights for the user.
	Guest	If the QAPP extension “User Management” has been activated: Define the role names, description, and rights for the guest.
Rules	Autom. logout after inactivity	If the QAPP extension “User Management” has been activated: Switches the device into standby mode after the selected time.
	Maximum retries	If the QAPP extension “User Management” has been activated: Define the number of maximum failed attempts for password entry.
	After maximum failed password entries	If the QAPP extension “User Management” has been activated: Activates the action after failed attempts at entering the password.
Local password rules		If the QAPP extension “User Management” has been activated: Define the permissible characters, length, and validity time for the password.
LDAP server configuration		If the QAPP extension “User Management” has been activated: Configure the data for device communication with an LDAP server.

7.7.3 Parameters in the “Timer-controlled Actions” Menu

Parameter	Setting Values	Explanation
Start task	Execution date	Activates the date and time for starting the task.
	Repeat period	Repeats in minutes, hours, days, months, or years.
	Name	Saves a name for the timer-controlled action.
	Action execution	Sets the action execution to cancelable or **not** cancelable.
	Task to start	Activates the desired task.
Display message	Execution date	Activates the date and time for displaying the message.
	Repeat period	Repeats in minutes, hours, days, months, or years.
	Name	Saves a name for the message.
	Message title	Saves a message title.
	Message content	Saves message content.
Standby mode	Execution date	Activates the date and time for standby mode.
	Repeat period	Repeats in minutes, hours, days, months, or years.
	Name	Saves a name for standby mode.
	Action execution	Sets the action execution to cancelable or **not** cancelable.
Wake-up from standby	Execution date	Activates the date and time for execution.
	Repeat period	Repeats in minutes, hours, days, months, or years.
	Name	Saves a name for wake-up from standby.
Switch-off	Execution date	Activates the date and time for switch-off.
	Repeat period	Repeats in minutes, hours, days, months, or years.
	Name	Saves a name for switch-off.
	Action execution	Sets the action execution to cancelable or **not** cancelable.
Automatic backup	Execution date	Activates the date and time for automatic backup.
	Repeat period	Repeats in minutes, hours, days, months, or years.
	Name	Saves a name for automatic backup.
	Action execution	Sets the action execution to cancelable or **not** cancelable.
	Backup to connector	Activates the desired connector, e.g., a USB stick.
Export audit trail	Execution date	Activates the date and time for exporting the audit trail.
	Repeat period	Repeats in minutes, hours, days, months, or years.
	Name	Saves a name for the audit trail export.
	Action execution	Sets the action execution to cancelable or **not** cancelable.
	Export to connector	Activates the desired connector for the export, e.g., a USB stick.
	Modules for export	Activates the respective module to be saved, e.g., audit trail, menu settings, etc.

7.7.4 Parameters in the “Weighing and Print Profiles / Weighing” Menu

Parameter	Setting Values	Explanation
Ambient conditions	Very stable	Sets the ambient conditions to “very stable”: Activates a fast change in the weight values in the event of a load change with a high output rate. Recommended for the following work environment: – Very stable table near the wall – Closed and calm room
	Stable	Sets the ambient conditions to “stable”. Recommended for the following work environment: – Stable table – Slight movement in the room – Slight draft
	Unstable*	Sets the ambient conditions to “unstable”: Activates the delayed change in weight values with a reduced output rate. Recommended for the following work environment: – Simple office desk – Room with moving machinery or personnel – Slight air movement
	Very unstable	Sets the ambient conditions to “very unstable”: Activates a significantly delayed change in the weight values and long wait for stability with a further reduction in the output rate. Recommended for the following work environment: – Noticeable and slow floor vibrations – Noticeable building vibrations – Weighed goods moved – Very strong air movements
Application filter	Weighing (final readout)*	Activates a filter that enables a fast change in the display for very fast load changes. Display changes with minimal load changes (in the digit range) occur more slowly.
	Dosing (filling mode)	Activates a filter that enables a very fast change in the display with minimal load changes (e.g. when dosing or filling vessels).
	Sensor mode (low filter)	Activates a weak but fast filter that always behaves in the same way for load changes (e.g. when dosing in automated systems).
	Dynamic mode (without filter)	Deactivates the active application filter.
Stability	Very high accuracy	Sets the stability to “very high accuracy”.
	High accuracy	Sets the stability to “high accuracy”.
	Medium accuracy*	Sets the stability to “medium accuracy”.
	Fast	Sets the stability to “fast”.
	Very fast	Sets the stability to “very fast”.
	Very slow	Sets the stability to “very slow”.

* Factory setting for the “Standard Weighing” factory-set weighing profile

Parameter	Setting Values	Explanation
Stability delay	Very short	Sets the stability delay to “very short”: The stability symbol is displayed after the stability criterion is reached.
	Short*	Sets the stability delay to “short”: The stability symbol only appears after a short delay in order to provide a reliable result despite fluctuations.
	Medium	Sets the stability delay to “medium”: The stability symbol only appears after a longer delay in order to provide a reliable result in case of higher fluctuations.
	Long	Sets the stability delay to “long”: The stability symbol only appears after a long delay in order to balance out major instability.
Zeroing | taring	Without stability	Without stability: The function of the [Zero] or [Tare] key is executed immediately once the key is pressed.
	After stability*	After stability: The function of the [Zero] or [Tare] key is only executed after stability is achieved.
	At stability	At stability: The function of the [Zero] or [Tare] key is executed if stability exists when the key is pressed.
Automatic zeroing	On*	Activates automatic zeroing. The display is automatically set to zero in case of a deviation of 0 less than (X).
	Off	Deactivates automatic zeroing. Zeroing must be triggered with the [Zero] key.
Preset tare 1	On*	Activates the second tare memory (preset tare).
	Off	Deactivates the second tare memory (preset tare).
Available units		The availability of units may depend on national legislation and is therefore country-specific. Multiple selection is possible.
	g – grams*	The device displays the weight in grams.
	kg – kilograms	The device displays the weight in kilograms.
	ct – carats	The device displays the weight in carats.
	lb – pounds	The device displays the weight in pounds.
	oz – ounces	The device displays the weight in ounces.
	ozt – troy ounces	The device displays the weight in troy ounces.
	tlh – Hong Kong taels	The device displays the weight in taels (Hong Kong).
	tls – Singapore taels	The device displays the weight in taels (Singapore).
	tlt – Taiwanese taels	The device displays the weight in taels (Taiwan).
	tlc – Chinese taels	The device displays the weight in taels (China).
	GN – grain	The device displays the weight in grains.
	dwt – pennyweight	The device displays the weight in pennyweights.
	mom – mommes	The device displays the weight in mommes.
	tol – tolas	The device displays the weight in tolas.

* Factory setting for the “Standard Weighing” factory-set weighing profile

Parameter	Setting Values	Explanation
Available units	bat – baht	The device displays the weight in baht.
	MS – mesghals	The device displays the weight in mesghals.
	N – newtons	The device displays the weight in newtons.
Available resolutions	All digits on*	"All digits on": All digits are shown in the display. Not available on conformity-assessed devices.
	Last digit off at load change	"Reduced by 1 digit for load change": The last digit on the display is switched off until stability is achieved.
	Last digit scale interval 1	"Last digit scale interval 1": The last digit always shows scale interval 1.
	Last digit off	"Last digit off": The last digit is switched off.
Profile name	User input	Saves a name assigned for the weighing profile, e.g. "My Weighing".
Profile description	User input	Saves a description for the weighing profile entered (optional).

* Factory setting for the "Standard Weighing" factory-set weighing profile

7.7.5 Parameters in the "Weighing and Print Profiles / YDP30, PC Direct, or SBI Direct" Menu

Parameter	Setting Values	Explanation
GLP print	Off*	Deactivates the GLP print.
	On	The GLP print is always switched on. All printouts contain a GLP header and a GLP footer.
GLP header or GLP footer (if GLP print "On")	Standard elements	– Adds elements to or deletes elements from the GLP header: Dashed line, space line, horizontal line, and signature. – Changes the sequence of the individual elements.
	Device information	– Adds elements to or deletes elements from the GLP header: Device ID 1, device ID 2, package version, last calibration, manufacturer, minUSP, model name, and serial number. – Changes the sequence of the individual elements.
	Task	– Adds elements to or deletes elements from the GLP header: QAPP version, task name, and user name. – Changes the sequence of the individual elements.
	Date and time	– Adds elements to or deletes elements from the GLP header: Date | time of report end, date | time of report start, and time zone. – Changes the sequence of the individual elements.
	User text	– Prints an entered description, e.g., the name of the print profile. – Adds or deletes up to four user texts.
	Measurement uncertainty	– Adds elements to or deletes elements from the GLP header: Calibration certificate, accreditation, created by, date, method, exponent, factor, process accuracy factor, summand. – Changes the sequence of the individual elements.

* Factory setting

Parameter	Setting Values	Explanation
Weight value print elements	Standard elements	– Adds or deletes print elements: Dashed line, date | time of application, space line, horizontal line, time zone, and user name. – Changes the sequence of the individual elements.
	Device information	– Adds or deletes the print element “Serial number”.
	Weighing	– Adds or deletes the following print elements: Data storage device ID, weight value block (gross, net, and tare value “N, T, GC”), and weight value. – Changes the sequence of the individual elements.
	Measurement uncertainty	– Adds or deletes the following print elements: Process accuracy, absolute uncertainty, and relative uncertainty. – Changes the sequence of the individual elements.
Connectors (for YDP printer)	YDP30	Displays the activated connector for printing.
	YDP30-NET	
Print mode (for YDP printer)	Report with print preview*	Displays the data to be printed in the operating display before printing.
	Immediate output without preview	Prints the determined data directly on the connected printer.
Paper (for YDP printer)	Continuous*	Continuously prints the individual printouts on the lineprint.
	Label	Continuously prints the individual printouts on the label printer.
Data fields (for PC direct only)	Title	Spreadsheet format: Sends the output with title.
	Header	Spreadsheet format: Sends the output with header.
	Value	Spreadsheet format: Sends the output with the value.
	Unit	Spreadsheet format: Sends the output with the unit.
Decimal point (for PC direct only)	Point	Spreadsheet format: Transmits the value with a decimal point to the PC program, e.g., 99.963 g
	Comma*	Spreadsheet format: Transmits the value with a decimal comma to the PC program, e.g., 99,963 g.
Column separator (for PC direct only)	Tab*	Spreadsheet format: Activates the tab character between the individual data fields in the spreadsheet.
	Space	Spreadsheet format: Activates the space between the individual data fields in the spreadsheet.
Output format of elements (for PC direct only)	One line	Sends the output in one line.
	Multiple lines	Sends the output in multiple lines.
* Factory setting		

Parameter	Setting Values	Explanation
Profile name (assigned print profiles for YDP30, PC direct, and SBI direct)	Printer YDP30 (only weight values)	Saves a name assigned for the print profile, e.g., "Printer YDP30".
	Printer YDP30 (GLP print, all data)	Saves a name assigned for the print profile, e.g., "Printer YDP30".
	Printer YDP30-NET (WLAN, GLP)	Saves a name assigned for the print profile, e.g., "Printer YDP30-NET".
	PC direct (USB keyboard emulation)	Saves a name assigned for the print profile, e.g., "PC direct".
	SBI print	Saves a name assigned for the print profile, e.g., "SBI print".
Profile description	User input	Saves an entered description for the print profile.
* Factory setting		

7.7.6 Parameters in the "Weighing and Print Profiles / PDF or CSV" Menu

Parameter	Setting Values	Explanation
GLP print	Off	Deactivates the GLP print.
	On*	The GLP print is always switched on. All printouts contain a GLP header and a GLP footer.
GLP header or GLP footer (if GLP print "On")	Standard elements	– Adds elements to or deletes elements from the GLP header: Dashed line, space line, horizontal line, and signature. – Changes the sequence of the individual elements.
	Device information	– Adds elements to or deletes elements from the GLP header: Device ID 1, device ID 2, package version, last calibration, manufacturer, minUSP, model name, and serial number. – Changes the sequence of the individual elements.
	Task	– Adds elements to or deletes elements from the GLP header: QAPP version, task name, and user name. – Changes the sequence of the individual elements.
	Date and time	– Adds elements to or deletes elements from the GLP header: Date | time of report end, date | time of report start, and time zone. – Changes the sequence of the individual elements.
	User text	– Prints an entered description, e.g., the name of the print profile. – Adds or deletes up to four user texts.
	Measurement uncertainty	– Adds elements to or deletes elements from the GLP header: Calibration certificate, accreditation, created by, date, method, exponent, factor, process accuracy factor, summand. – Changes the sequence of the individual elements.
* Factory setting		

Parameter	Setting Values	Explanation
Weight value print elements	Standard elements	– Adds or deletes print elements: Dashed line, date | time of application, space line, horizontal line, time zone, and user name. – Changes the sequence of the individual elements.
	Device information	Adds or deletes the print element “Serial number”.
	Weighing	– Adds or deletes the following print elements: Data storage device ID, weight value block (gross, net, and tare value “N, T, GC”), and weight value. – Changes the sequence of the individual elements.
	Measurement uncertainty	– Adds or deletes the following print elements: Process accuracy, absolute uncertainty, and relative uncertainty. – Changes the sequence of the individual elements.
Connectors	USB stick	Displays the activated connector for printing.
Profile name (assigned print profiles for PDF and CSV)	PDF document on USB	Saves a name assigned for the print profile, e.g., “PDF document”.
	Spreadsheet (CSV) on USB	Saves a name assigned for the print profile, e.g., “Spreadsheet (CSV)”.
Profile description	User input	Saves an entered description for the print profile.
* Factory setting		

7.7.7 Parameters in the “Connections / Connectors” Menu

Parameter	Setting Values	Explanation
USB	Connector name	Saves the entered name for a USB stick.
	Destination directory	Saves the name of a destination directory.
YDP30-NET	Connector name	Saves the entered name for a YDP30-NET.
	IP or host	Enter the IP or host address for the printer.
	Port	Define the port for the printer, e.g., “9100”.
FTP or FTPS	Connector name	If the QAPP extension has been activated: Saves the entered name of an FTP or FTPS server.
	IP address	If the QAPP extension has been activated: Enter the IP address for the device.
	Port	If the QAPP extension has been activated: Define the port for the device, e.g., “21”.
	Sub-directory	If the QAPP extension has been activated: Saves the name of a sub-directory.
	User	If the QAPP extension has been activated: Saves the name of the user.
	Password	If the QAPP extension has been activated: Saves the password for FTP or FTPS access.

Parameter	Setting Values	Explanation
Network printer	Connector name	Saves the entered name for a network printer.
	IP or host	Enter the IP or host address for the printer.
	Protocol	Define the protocol for the printer: Socket*, IPP, HTTP, or LDP
SMB	Connector name	If the QAPP extension “Windows File Server” has been activated: Saves the entered name of a Windows file server.
	//Host/Share	If the QAPP extension “Windows File Server” has been activated: Enter the host and share names of the Windows file server.
	Sub-directory	If the QAPP extension “Windows File Server” has been activated: Saves the name of a sub-directory.
	User	If the QAPP extension “Windows File Server” has been activated: Saves the name of the user.
	Password	If the QAPP extension “Windows File Server” has been activated: Saves the password for access to the Windows file server.
* Factory setting		

7.7.8 Parameters in the “Connections / Network” Menu

Parameter	Setting Values	Explanation
General settings	Host name	Saves the device host name.
Ethernet	IPv4 method	Sets the method to DHCP, Manual or Off.
	IPv4 address	If “Manual” has been selected for the IP method: Saves the number of an IP address.
	IPv4 subnet mask	If “Manual” has been selected for the IP method: Saves the number of a subnet mask.
	IPv4 gateway	If “Manual” has been selected for the IP method: Saves the number of the gateway.
	IPv6 method	Sets the method to Auto, Manual or Off.
	IPv6 address	If “Manual” has been selected for the IP method: Saves theynumber of an IP address.
	IPv6 prefix length	If “Manual” has been selected for the IP method: Saves the number of the prefix length.
	IPv6 gateway	If “Manual” has been selected for the IP method: Saves the number of the gateway.
	DNS 1	Saves the value for DNS 1.
	DNS 2	Saves the value for DNS 2.

Parameter	Setting Values	Explanation
Wi-Fi	Wi-Fi SSID	Saves the name of the WI-FI SSID.
	Wi-Fi password	Saves a password for Wi-Fi access.
	IPv4 method	Sets the method to DHCP, Manual or Off.
	IPv4 address	If "Manual" has been selected for the IP method: Saves the number of an IP address.
	IPv4 subnet mask	If "Manual" has been selected for the IP method: Saves the number of a subnet mask.
	IPv4 gateway	If "Manual" has been selected for the IP method: Saves the number of the gateway.
	IPv6 method	Sets the method to Auto, Manual or Off.
	IPv6 address	If "Manual" has been selected for the IP method: Saves the number of an IP address.
	IPv6 prefix length	If "Manual" has been selected for the IP method: Saves the number of the prefix length.
	IPv6 gateway	If "Manual" has been selected for the IP method: Saves the number of the gateway.
	DNS 1	Saves the value for DNS 1.
	DNS 2	Saves the value for DNS 2.

7.7.9 Parameters in the "Connections / Website / Web Services" Menu

Parameter	Setting Values	Explanation
Website access	Deactivated	Deactivates the display of the website for the device.
	On, without authentication*	Sets the display options of the website for the device to Available units "without authentication".
Remote access	View only*	Permits remote access in view mode via a browser.
	View and remote control	Permits remote access via a browser.
Web service password	User input	Saves a password for web service access.
* Factory setting		

7.7.10 Parameters in the “Connections / Certificates” Menu

Parameter	Setting Values	Explanation
Trusted certification authorities	List of certification authorities	Activates a trusted certification authority (CA), in order to identify trusted servers, e.g., “GlobalSign”.
	Loading certification authorities from a connector	Imports a certification authority, e.g., from a network server or USB stick.
Device certificates	List of device certificates	Activates a device certificate, e.g “GlobalSign”.
	Loading device certificates from a connector	Imports a certification authority for safe remote access to the device website, e.g., from a network server or USB stick.
Trust unknown certification authorities	No (secure)	
	Yes (insecure)*	
* Factory setting		

7.7.11 Parameters in the “Connections / Interfaces / Serial Communication over Network” (Ethernet) Menu

Parameter	Setting Values	Explanation
Protocol	Off*	Deactivates the serial transmission via Ethernet.
	SBI	Enables SBI communication. The data is output to a PC or control unit. Enables the use of ESC commands from a PC to control the basic balance functions with ASCII protocol.
	SICS	Enables SICS communication. The data is output to a PC or control unit. Enables the use of commands from a PC to control the basic balance functions with SICS protocol.
	xBPI	Extended range of commands to control numerous balance functions with binary protocol for direct communication with the weighing module.
	QAPP direct	Allows for the data input and output via a QAPP direct connection from a network server or USB stick to a data processing program. Only the special QAPPs, which are started by a task, can use the interface for their purposes of input and output.
	miniSICS	Enables miniSICS communication. The data is output to a PC or control unit. Enables the use of commands from a PC to control the basic balance functions with the miniSICS protocol.
Log communication	On	Activates the automatic data recording for this interface (only activate for test purposes).
	Off*	Deactivates the automatic data recording for this interface.
Port	User input	Saves the entered port number for the Ethernet interface.
* Factory setting		

7.7.12 Parameters in the "Connections / Interfaces / COM-RS232 Interface" Menu

Parameter	Setting Values	Explanation
Protocol	Off*	Deactivates the RS232 connection.
	SBI	Enables SBI communication. The data is output to a PC or control unit. Enables the use of ESC commands from a PC to control the basic balance functions with ASCII protocol.
	SICS	Enables SICS communication. The data is output to a PC or control unit. Enables the use of commands from a PC to control the basic balance functions with SICS protocol.
	xBPI	Extended range of commands to control numerous balance functions with binary protocol for direct communication with the weighing module.
	QAPP direct	Enables data entry and output to a data processing program via a QAPP direct connection. Only the special QAPPs, which are started by a task, can use the interface for their purposes of input and output.
	miniSICS	Enables miniSICS communication. The data is output to a PC or control unit. Enables the use of commands from a PC to control the basic balance functions with the miniSICS protocol.
Log communication	On	Activates the automatic data recording for this interface (only activate for test purposes).
	Off*	Deactivates the automatic data recording for this interface.
Baud rate	600 baud	Sets the baud rate to 600 baud.
	1200 baud	Sets the baud rate to 1200 baud.
	2400 baud	Sets the baud rate to 2400 baud.
	4800 baud	Sets the baud rate to 4800 baud.
	9600 baud*	Sets the baud rate to 9600 baud.
	19200 baud	Sets the baud rate to 19200 baud.
	38400 baud	Sets the baud rate to 38400 baud.
	57600 baud	Sets the baud rate to 57600 baud.
	115200 baud	Sets the baud rate to 115200 baud.
Data bits	7 data bits	Sets the number of data bits to 7.
	8 data bits*	Sets the number of data bits to 8.
Stop bits	1 stop bit*	Sets the number of stop bits to 1.
	2 stop bits	Sets the number of stop bits to 2.
Parity	None	Does **not** apply a parity.
	Even	Applies an even parity.
	Odd*	Applies an odd parity.

Parameter	Setting Values	Explanation
Handshake	Software	Sets the handshake protocol to software handshake.
	Hardware*	Sets the handshake protocol to hardware handshake.
	None	Does **not** set a handshake protocol.

* Factory setting

7.7.13 Parameters in the "Connections / Interfaces / USB-B Interface" Menu

Parameter	Setting Values	Explanation
Protocol	Off*	Deactivates the USB-B connection.
	SBI	Enables SBI communication. The data is output to a PC or control unit. Enables the use of ESC commands from a PC to control the basic balance functions with ASCII protocol.
	SICS	Enables SICS communication. The data is output to a PC or control unit. Enables the use of commands from a PC to control the basic balance functions with SICS protocol.
	xBPI	Extended range of commands to control numerous balance functions with binary protocol for direct communication with the weighing module.
	PC direct	Enables data output to a spreadsheet program via a direct PC connection.
	QAPP direct	Enables data entry and output to a data processing program via a QAPP direct connection. Only the special QAPPs, which are started by a task, can use the interface for their purposes of input and output.
	miniSICS	Enables miniSICS communication. The data is output to a PC or control unit. Enables the use of commands from a PC to control the basic balance functions with the miniSICS protocol.
Log communication	On	Activates the automatic data recording for this interface (only activate for test purposes).
	Off*	Deactivates the automatic data recording for this interface.

* Factory setting

7.7.14 Parameters in the "Connections / SBI Protocol" Menu

Parameter	Setting Values	Explanation
Format	Value without header	The data output only exports the measured value without ID code.
	Value (with header)*	The data output exports the measured value with ID codes.
	Date & time, value (two lines)	The data output exports the measured value, date, and time.
Output	Without stability*	The data is output without the weight value being stable.
	With stability	The data is output only when the weight value is stable.
Automatic output	Off*	Deactivates the automatic data output. The data output must be triggered by means of an SBI command with "ESC P".
	Each weight value	Starts the automatic data output with each value according to the display result.
	1 second	Starts the automatic data output every second.
	2 seconds	Starts the automatic data output every 2 seconds.
	5 seconds	Starts the automatic data output every 5 seconds.
	10 seconds	Starts the automatic data output every 10 seconds.
	30 seconds	Starts the automatic data output every 30 seconds.
	60 seconds	Starts the automatic data output every 60 seconds.
Display SBI error messages	Off*	Displays **no** error messages.
	On	Displays error messages if errors occur when receiving and executing SBI commands.
Formatting output values	Output in one line with full length	– Outputs the elements in the full length, e.g., header and value. – The elements are separated by a space character, left-aligned, and output without infilling with space characters.
	Output in several lines with 20 char. each	– Distributes outputs, which due to their length do not fit in the standard output format of 20 characters, over several lines with 20 characters each. – Aligns each line to the left and infills with space characters to make up 20 characters.
	Cut off to a 20 character line*	– Defines the output in a standard output format of 20 characters. – Crops the end of longer outputs.

* Factory setting

7.7.15 Parameters in the “Connections / Climate Modules” Menu

Parameter	Setting Values	Explanation
Climate modules	Display of connected climate module	Activates climate modules if they are connected to the device.

7.7.16 Parameters in the “Connections / Connected Devices / Motion Sensor” Menu (only for connected motion sensors)

Parameter	Setting Values	Explanation
Number of gestures	2 gestures (left, right)*	Activates the control of functions with 2 gestures. Gestures: left, right.
	4 gestures (left, right, up, down)	Activates the control of functions with 4 gestures. Gestures: left, right, down, up.
	Any gesture	Activates the control of functions with any gesture.
Left gesture	No action	Disables the functions of the motion sensor.
Right gesture	Start / cancel taring	The gesture starts a taring process or cancels a taring process.
Up gesture Down gesture	Start / cancel zeroing	The gesture starts the zeroing process or cancels the zeroing process.
	Zeroing / taring	Starts or ends the “Zeroing|taring” function.
	Takeover key	Uses the gesture to start an application or adopts displayed weight values.
* Factory setting		

7.7.17 Parameters in the “Connections / Connected Devices / External USB Keys (only for connected peripheral device)” Menu

Parameter	Setting Values	Explanation
Press key 1 (F1)	No action	Deactivates the function of the connected device.
Release key 1 (F2)	Start / cancel taring	Starts a taring process or cancels a taring process.
Press key 2 (F3)	Start / cancel zeroing	Starts the zeroing process or cancels the zeroing process.
Release key 2 (F4)	Zeroing / taring	Starts or ends the “Zeroing|taring” function.
Press key 3 (F5)	Takeover key	Starts an application or adopts displayed weight values.
Release key 3 (F6)		

7.7.18 Parameters in the "Device Settings / Date and Time" Menu

Parameter	Setting Values	Explanation
NTP configuration	NTP operating status	Activates or deactivates the time synchronization with the NTP server.
	Server IP	Saves the entered server ID for the NTP server.
Set the date and time	Date format	Sets the date display format to DD|MM|YYYY, MM|DD|YYYY, DD.MM.YYYY, YYYY-MM-DD (ISO)*, YYYY:MM:DD, DD-MMM-YYYY or MMM-DD-YYYY.
	Set date	Saves the entered date.
	Time format	Sets the time display format to HH.MM.SS, HH:MM:SS (ISO)* or HH:MM:SS am|pm.
	Set time	Saves the entered time.
	Time zone	Saves the selected time zone.
* Factory setting		

7.7.19 Parameters in the "Device Settings / Safe Weighing" Menu

Parameter	Setting Values	Explanation
isoCAL execution mode	Off	Deactivates the isoCAL function. Depending upon the national legislation, this setting is **not** possible in conformity-evaluated (calibrated) devices or else the device may only be operated in a restricted temperature range.
	Show status field, manual start	– Enables the adjustment request based on time, temperature, or leveling. – If the device must be calibrated: The [isoCAL] button is displayed as the predominant button in the operating display. – The isoCAL function must be manually triggered using the [isoCAL] button.
	On, automatic execution*	Activates the isoCAL function. The device is adjusted automatically as soon as the adjustment request based on time, temperature, or leveling is present and specific preconditions are fulfilled.
	On, automatic execution with linearization (only if possible)	Activates the isoCAL and linearization function. The device is automatically adjusted and then linearized as soon as a trigger starts the isoCAL function. This function is possible only in certain model variants.
* Factory setting		

Parameter	Setting Values	Explanation
Safety level	Off	Deactivates the message for leveling or executing isoCAL at the start of the task. The execution of the leveling or isoCAL function can be triggered manually via the respective button in the display.
	Warning*	If the isoCAL function or the leveling must be carried out: The device displays a message. Some device functions are limited until isoCAL or the leveling has been executed. The message remains intact in the event of an abort. The execution of the leveling or isoCAL function can be triggered manually via the respective button in the display. The displayed weight value is marked as invalid; printed data are marked with [!].
	Strict	If the isoCAL function or the leveling must be carried out: The device displays a message. Some device functions are limited until isoCAL or the leveling has been executed. Upon aborting the function, the task is not started; the function for the message must be executed. If a message appears while executing the task, the weighed value is marked as invalid. The takeover of this weighed value is blocked automatically. The weighed value can be taken over again only when the function for message has been executed. The data output is deactivated.

* Factory setting

7.7.20 Parameters in the "Device Settings / Preload" Menu

Parameter	Setting Values	Explanation
Preload	Set preload	– Sets the load present on the device as a preload and therefore changes the zero point of the device. – Reduces the maximum capacity by the set preload.
	Delete preload	– Deletes the set preload. – Changes the zero point and maximum capacity back to the values they were before the preload was set.

7.7.21 Parameters in the "Device Settings / Calibration / Adjustment Report" Menu

Parameter	Setting Values	Explanation
Automatic printout for isoCAL	On	Activates the automatic printout for the "isoCAL" function.
	Off*	Deactivates the automatic printout for the "isoCAL" function.
Automatic printout for cal./adj. task	On	Activates the automatic printout for the functions of the "calibration/adjustment" tasks.
	Off*	Deactivates the automatic printout for the functions of the "calibration/adjustment" tasks.
Print profile	List of print profiles	Selection of a print profile via which the printout must be carried out.

* Factory setting

7.7.22 Parameters in the "Device Settings / minUSP" Menu

Parameter	Setting Values	Explanation
minUSP function	Off*	If this extension has been activated in the QAPP Center: Deactivates the minimum initial weight.
	On	If this extension has been activated in the QAPP Center: Activates the minimum initial weight.
Starting point of operating range	User input	If this extension has been activated in the QAPP Center: Define the starting point value.
Mark weight values < minUSP as invalid	Off*	If this extension has been activated in the QAPP Center: Deactivates the identification of weight values that are less than the minimum initial weight.
	On	If this extension has been activated in the QAPP Center: Activates the identification of weight values that are less than the minimum initial weight and prevents them being adopted. These values are **not** only marked, they **cannot** be adopted.
* Factory setting		

7.7.23 Parameters in the "Device Settings / Measurement Uncertainty" Menu

Parameter	Setting Values	Explanation
Active	Off*	If this extension has been activated in the QAPP Center: Disables the measurement uncertainty.
	On	If this extension has been activated in the QAPP Center: Activates the dynamic display of the measurement uncertainty for the weight value.
Method	User input	If this extension has been activated in the QAPP Center: Saves a name assigned for the method, e.g., EURAMET cg-18
Calibration certificate	User input	If this extension has been activated in the QAPP Center: Saves a name assigned for the calibration certificate.
Date	User input	If this extension has been activated in the QAPP Center: Defines the date of the measurement uncertainty.
Created by	User input	If this extension has been activated in the QAPP Center: Saves the name of the user.
Accreditation	User input	If this extension has been activated in the QAPP Center: Saves the name of the accreditation.
Displayed value	Absolute uncertainty*	If this extension has been activated in the QAPP Center: Calculates the measurement uncertainty as an absolute value.
	Relative uncertainty	If this extension has been activated in the QAPP Center: Calculates the measurement uncertainty as a relative value.
	Process accuracy	If this extension has been activated in the QAPP Center: Calculates the measurement uncertainty according to the input of the process accuracy factors.
* Factory setting		

Parameter	Setting Values	Explanation
Process accuracy factor	Enter factor	If this extension has been activated in the QAPP Center: Saves the entry for the process accuracy factor.
Summand a(1)	Enter summand	If this extension has been activated in the QAPP Center: Saves the entries for range 1.
Factor b(1)	Enter factor	
Exponent b(1) (e-)	Enter exponent	
Summand a(n)	Enter summand	If this extension has been activated in the QAPP Center: Saves the entries for range n.
Factor b(n)	Enter factor	
Exponent b(n) (e-)	Enter exponent	
* Factory setting		

7.7.24 Parameters in the "Device Settings / Device ID" Menu

Parameter	Setting Values	Explanation
Device ID 1	User input	Saves the entered device ID.
Device ID 2	User input	Saves the entered device ID.

7.7.25 Parameters in the "Device Settings / Electronic Signature" Menu

Parameter	Setting Values	Explanation
Sign report	Off*	If the QAPP extension has been activated: Deactivates electronic signature.
	On	If the QAPP extension has been activated: Activates electronic signature.
* Factory setting		

7.7.26 Parameters in the "Device Settings / Start-up Behavior" Menu

Parameter	Setting Values	Explanation
Initial zeroing | taring	Off	Deactivates automatic zeroing and taring when starting the device.
	On*	Activates automatic zeroing and taring when starting the device.
Automatic login	Off	Deactivates "Automatic login". **No** user is logged in automatically when starting the device.
	Administrator*	Activates "Automatic login". The administrator is logged in automatically when starting the device.
	Operator	Activates "Automatic login". The selected user is logged in automatically when starting the device.

Parameter	Setting Values	Explanation
Automatic start of last task	Off*	**No** task is started automatically after device login.
	On	After logging-in on the device, the task being performed by the last user to be logged in starts automatically.
* Factory setting		

7.7.27 Parameters in the "Device Settings / Display Properties" Menu

Parameter	Setting Values	Explanation
Display brightness	Bright	Sets the illumination on the operating display to "bright".
	Medium	Sets the illumination on the operating display to "medium".
	ECO mode*	Activates eco mode. For longer periods of downtime, the operating display darkens automatically.
On/off switch	Standby mode*	The [Standby] button switches the device into standby mode. The device can be reactivated by pressing the [Standby] button.
	Off	The [Standby] button switches the device off. The device must be reactivated by pressing the ON key.
Color scheme	Sartorius Standard*	If the QAPP extension has been activated: Selects the color scheme for the "Sartorius Standard" operating display. Additional color schemes can be unlocked via the QAPP Center.
* Factory setting		

7.7.28 Parameters in the "Device Settings / Sound (Loudspeaker)" Menu

Parameter	Setting Values	Explanation
Touch sounds	Activated	Deactivates the acoustic signal for touch and keypad operation.
	Deactivated*	Activates the acoustic signal for touch and keypad operation.
Message sounds	Activated	Deactivates the acoustic signal for messages.
	Deactivated*	Activates the acoustic signal for messages.
Sound for end-of-action	Activated	Deactivates the acoustic signal for the completion of an action.
	Deactivated*	Activates the acoustic signal for the completion of an action.
* Factory setting		

7.7.29 Parameters in the “Device Maintenance” Menu

Parameter	Setting Values	Explanation
Update firmware	List of connectors and then list of firmware	– Starts a firmware update. – **Not** for conformity-assessed devices.
Install QAPP Center	List of connectors and then list of QAPP Centers	Updates the QAPP Center using the selected connector.
Install customized QAPP	List of connectors and then list of customized QAPPs	Updates a customized QAPP using the selected connector.
Device data backup	List of connectors	Saves the device data on the selected connector.
Restore device data	List of connectors	Loads saved device data from the selected connector.
Export device data	Role management	Saves device role management for an administrator, user, or guest on the selected connector.
	User management	Saves device user management for an administrator, user, or guest on the selected connector.
	Export overview	Displays the list of connectors, e.g., a server or connected USB stick.
Import device data	List of connectors for import	Loads the device data with role and user management, e.g., from a server or connected USB stick.
Reset to factory settings	Restore factory settings	– Resets the device to factory settings and deletes all configurations. – The audit trail and data memory will be retained.
Create diagnostic file		Saves information about device configuration and operation on a connected USB stick.

8 Operation

8.1 Switching the Device On and Off

The device only delivers accurate values if it has reached the necessary operating temperature. The warm-up time after switching the device on must therefore be complied with.

If the device is being switched on for the first time or if the device is switched on after being reset to factory settings: The Setup Wizard opens. All steps in the Setup Wizard must be completed.

Requirements

The device is connected to the power supply.

Procedure

- ▶ If the device does **not** switch on automatically after it is connected to the power supply: Press the ON key on the weighing module.
- ▶ **NOTICE** Pointed or sharp-edged objects may damage the operating display! Touching the operating display with objects, such as pens, may damage the touchscreen surface of the operating display. Only touch the operating display with your fingertips.
- ▶ If the Setup Wizard is shown: Follow the instructions in the Setup Wizard in the operating display.
- ▶ If the login display is displayed: Log into the device using a user profile.
- ▷ If the device is switched on after the Setup Wizard is complete and **no** passwords have been assigned for the user profiles: The user profile for the last user to be logged in is loaded.
- ▶ To allow the device to reach the necessary operating temperature to accurately determine the weight: Comply with the warm-up time of 30 minutes after switching the device on.
- M ▷ If this relates to a conformity-assessed device: The weight value is marked as **invalid** during the warm-up period.
- ▶ To switch the device off: Disconnect the device from the power supply.

8.2 Logging Users In and Out

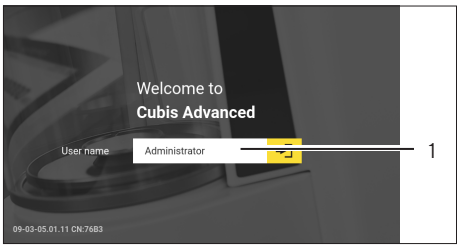

Procedure

- ▶ If the name of the desired user profile is displayed in the entry field (1) of the login display: Press the [Login] button.
- ▶ If the name of the desired user profile is **not** displayed in the entry field of the login display:
  - ▶ Tap on the entry field in the login display.
  - ▷ The user selection opens.
  - ▶ Press the name of the desired user profile.
  - ▶ If a password has been assigned for the desired user: Enter the password in the entry field and press the [OK] button.
  - ▷ The user profile opens and the main menu or the last task being performed by the active user is displayed.
- ▶ To log out the active user profile from the device: Press the [Log-out button.

8.3 Leveling the Device

8.3.1 Level Device with Inclination Sensor

Leveling compensates any inclines at the device's installation site.
If leveling is necessary: The [Leveling] button appears in the weighing display and a message appears in the Status Center.

Procedure

- ▶ If the weighing display is displayed: Press the [Leveling] button.
- ▶ When the Status Center is displayed: Press the [Level] button.
- ▷ The wizard for leveling with inclination sensor opens.
- ▶ Follow the wizard's instructions.

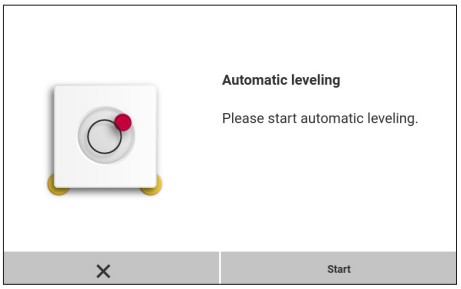

8.4 Activating Applications and Adding a Task

8.4.1 Activating Applications

All applications from the QAPP package “Essentials” are activated for the device at the factory. Additional applications may be activated in the QAPP center. These applications and QAPP packages can be tested for 30 days free of charge, and after that require a license.

Procedure

- ▶ Open Task Management.
- ▶ Press the [QAPP center] button.
- ▷ An overview of all available QAPP packages is displayed.
- ▶ Select the desired software application package e.g. pharmaceuticals.
- ▶ To scroll through the contents of a displayed QAPP package:
  Swipe the contents of the QAPP package upwards or downwards.

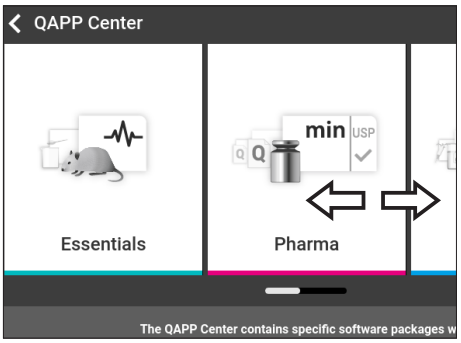

- ▶ Select the desired QAPP package.
- ▷ A list of all the applications contained in the QAPP package is displayed.
- ▶ If the selected QAPP package is to be approved with all the applications it contains:
  - ▶ Press the [License] button.
  - ▷ The input field for the license key appears.
  - ▶ If an additional cost is associated with the QAPP package:
    Enter the license key in the entry field and press the [OK] button.
  - ▶ If no additional cost is associated with the QAPP package:
    Press the [OK] button.
- ▶ If an individual application from the displayed QAPP package is to be activated:
  - ▶ Press the desired application.
  - ▷ A display opens containing details about the selected application.
  - ▶ Press the [License] button.
  - ▷ The input field for the license key appears.
  - ▶ If an additional cost is associated with the application:
    Enter the license key in the entry field and press the [OK] button.
  - ▶ If no additional cost is associated with the application:
    Press the [OK] button.

8.4.2 Adding an Application to a Task

Applications must be added to a task so that they can run.

Procedure

- ▶ Open Task Management.
- ▶ Press the [New] button.
- ▷ A list of all activated applications is displayed.
- ▶ To select an application: Press the desired application.
- ▷ The wizard for creating a new task starts.
- ▶ Follow the wizard's instructions in the operating display.

8.5 Adding Weighing and Print Profiles to a Task

To be able to use a print or weighing profile: Add a print or weighing profile to a task.

Procedure

- ▶ Open Task Management.
- ▶ Create or edit a task. In order to do so, start the wizard to create or edit a task and follow the wizard's instructions in the operating display.

8.6 Preparing Weighings

The device must be prepared before every weighing.

Procedure

- ▶ Level the device.
- ▶ Zero the device. In order to do so, press the [Zero] button.
- ▶ If the device **cannot** be zeroed: Remove the sample to be weighed and re-zero the device.
- ▶ Calibrate the device.

8.7 Weighing

NOTICE

Chemicals may damage the device or accessories!

Chemicals can attack the device or the connected accessories internally and externally. This may damage the device and accessories.

▶ Use appropriate containers when weighing chemicals.

Procedure

▶ Start a task with weighing function.
▶ Zero the device. In order to do so, press the [Zero] button.
▶ If below-balance weighing is being carried out: Suspend the sample on the hook for below-balance weighing, e.g. with a wire.
▶ If a container is being used for the sample:
  ▶ Place the container on the weighing pan.
  ▶ Tare the device. In order to do so, press the [Tare] button.
  ▶ Place the sample in the container or fill the container.
▶ If **no** container is used for the sample and **no** below-balance weighing is being carried out: Place the sample on the weighing pan.
▶ Once the weight value is displayed in black and the weighing unit is displayed: Read off the measured value.

8.8 Overview of Calibration, Adjustment, and Linearization

During calibration, a calibration weight is used to determine how much the displayed value deviates from the actual value. This deviation is compared against a preset target value. The subsequent adjustment eliminates this deviation. During linearization, the deviation of the values from the ideal characteristic curve is corrected.

Calibration and adjustment must be performed regularly:

- Daily, every time the device is switched on
- After every leveling
- After changing the ambient conditions (temperature, humidity, or air pressure)
- After setting the device up at a new installation site

Calibration and adjustment may be performed in different ways:

- Adjusting with the isoCAL function
- Internal or external calibration or adjustment

M

Only internal adjustment | calibration is possible for all conformity-assessed devices in legal metrology.

8.9 Adjusting with the isoCAL Function

The device can be automatically internally calibrated and adjusted using the isoCAL function.

Requirements

- The device is **not** located in the menu.
- Alphanumeric inputs are **not** active.
- The load on the weighing pan remains unchanged for 2 minutes.
- The load on the weighing pan amounts to no more than 2% of the maximum load.
- The device does **not** register an input for 2 minutes.

If all requirements for starting the isoCAL function are met and one of the following conditions occurs: The isoCAL function is automatically triggered.

Possible conditions are:

- The ambient temperature has changed since the last adjustment | calibration.
- The interval time was exceeded (interval time, see Chapter "15.9 isoCAL Function", page 94).
- The device has been leveled.
- The device has been disconnected from the power supply since the last adjustment | calibration (only for conformity-assessed models).

Procedure

▶ If the isoCAL automatic start function is set and the [isoCAL] button is displayed as the predominant button in the operating display:
  ▶ Wait until the isoCAL function starts automatically.
  ▷ In the operating display, a time display counts down to 0.
  ▷ If **no** load change or **no** operation takes place on the device before the expiration of the time display: The isoCAL function starts.

▶ If the isoCAL manual start function is set and the [isoCAL] button is displayed as the predominant button in the operating display:
  ▶ Press the [isoCAL] button.
  ▶ If information is displayed stating that the weighing pan is loaded: Unload the weighing pan.
  ▷ The isoCAL function starts.

▷ If the isoCAL function is complete: The device confirms the completion of the calibration | adjustment process with an acoustic signal, and the calibration report is displayed.

▶ Output the calibration report via a connector: Press the [Print Memory] button.

▶ To close the calibration report and return to the previous display: Press the [OK] button.

8.10 Internally Calibrating and Adjusting the Device

Requirements

The weighing pan is unloaded.

Procedure

- ▶ Open the main menu.
- ▶ Press the “Internal Adjustment” task.
- ▷ The internal calibration | adjustment function is executed.
- ▷ If the calibration | adjustment function is complete: The device confirms the completion of the calibration | adjustment process with an acoustic signal, and the calibration report is displayed.
- ▶ Output the calibration report via a connector: Press the [Print Memory] button.
- ▶ To close the calibration report and return to the main menu: Press the [OK] button.

8.11 Weighing and Printing with ID Marking

8.11.1 Saving Values for Printouts

Every lot and every sample can be assigned an ID number. The ID numbers are saved in the print memory and exported during the printing process.

Requirements

The prompt for the lot IDs and sample IDs is activated for the “Standard weighing” task.

Procedure

- ▶ Open the main menu.
- ▶ Start the “standard weighing” task: In order to do so, tap on the task.
- ▷ The input field for the lot ID is displayed.
- ▶ If a barcode scanner is connected to the device: Scan or type the lot ID into the entry field.
- ▶ If **no** barcode scanner is connected to the device: Type the lot ID into the entry field.
- ▶ Press the [OK] button.
- ▷ The weighing display is displayed.
- ▶ Zero the device. In order to do so, press the [Zero] button.
- ▶ Place the sample on the weighing pan.
- ▶ Press the [Confirm] button.
- ▷ The input field for the sample ID is displayed.

- ▶ Scan or type the lot ID into the entry field.
- ▶ Press the [OK] button.
- ▷ The [Print memory] button appears in the operating display.
- ▷ The weight value and entered IDs are saved.
- ▶ If additional values are to be saved:
  - ▶ Remove the sample being weighed.
  - ▶ Place the next sample on the weighing pan and press the [Confirm] button.
  - ▶ Scan or type the lot ID into the entry field.
  - ▶ Press the [OK] button.

8.11.2 Marking Saved Values as Invalid

Procedure

- ▶ Press the [Print Memory] button.
- ▷ The print memory opens and a list of all saved values is displayed.
- ▶ Press the desired items.
- ▷ An overview of all data to be printed is displayed for the selected items.
- ▶ Press the [Yes] button.
- ▶ If a reason for the invalidity of the value needs to be displayed on the printout: Enter a reason in the entry field and press the [OK] button.
- ▶ If **no** reason for the invalidity of the value needs to be displayed on the printout: Press the [No] button.

8.11.3 Marking Saved Values as Valid

Procedure

- ▶ Press the [Print Memory] button.
- ▷ The print memory opens and a list of all saved values is displayed.
- ▶ Press the items which are desired to be marked as invalid.
- ▷ An overview of all data to be printed is displayed for the selected items.
- ▶ Press the [Yes] button.

8.11.4 Printing Saved Values

Procedure

- ▶ Press the [Print Memory] button.
- ▷ The print memory opens and a list of all saved values is displayed.
- ▶ To start the print process using the print profile embedded in the current task: Press the [Print] button.
- ▷ A PDF file is produced and sent to the printer defined in the print profile. For two print profiles with different connectors: The print processes will be started in succession.

8.11.5 Exiting the Task

Procedure

- ▶ Press the [Exit] or [Menu] button.
- ▷ If additional values are to be saved in the print memory:
  - ▷ A dialog for prematurely ending the task appears.
  - ▶ To return to the weighing display and print the saved values: Tap on the [Yes] button and print the saved values.
  - ▶ To exit the task and delete the saved values from the print memory: Press the [No] button.
- ▷ The task ends and the main menu is displayed. For two print profiles with different connectors: The print processes will be started in succession.

8.12 Viewing the Data Storage Device

The data storage device stores weight values with date, time, and process number. The content of the data storage device can be searched and sorted using a filter. The data storage device has a ring buffer. This means that the oldest data records can be overwritten by new ones. The data storage device is designed for a specific number of data records (for the number of data records see Chapter "15.10 Data Storage Device", page 95).

The user alone is responsible for making sure that there is sufficient storage capacity and the saved weighed values are present.

M

The data storage device is verifiable. The proper functioning of the data storage device must be ensured for verification by saving and checking some values.

Procedure

- ▶ Open the "Settings / Device Settings / Device Information" menu.
- ▶ Press the "View data storage device" menu entry.
- ▷ A list of all the values saved in the data storage device is displayed.
- ▶ If only the values for a desired date need to be displayed:
  - ▶ Press the [Filter] button.
  - ▶ Type the desired date into the entry field.
  - ▶ To filter the list with the date entered: Press the [OK] button.
- ▶ If the list needs to be searched for a particular ID:
  - ▶ Press the [Search] button.
  - ▶ Type the desired ID into the entry field.
  - ▶ To start the search with the entered ID: Press the [OK] button.

8.13 Running Applications (Examples)

8.13.1 Executing the "Unit Change" Function

The "Unit change" function enables the user to switch between the different units and resolutions defined in the weighing profile of the active task. The units and resolutions can be set at the beginning of the weighing process.

Procedure

- ▶ Start the desired task.
- ▶ Press the [Unit change] button.
- ▷ All units defined in the weighing profile for the active task are displayed in a list.
- ▷ All resolutions for the weight value defined in the weighing profile for the active task are displayed in a list.
- ▶ Press the desired unit.
- ▶ To set the resolution for the selected unit: Press the desired resolution.
- ▶ To confirm the selection and return to the weighing display: Press the [OK] button.
- ▷ The current weight value is displayed in the selected unit and resolution.

8.13.2 Running the "Statistics" Application (from QAPP Package "Essentials")

The "Statistics" application saves up to 100 weight values and evaluates these statistically.

The following values are saved and exported by the statistics application:

- Number of components
- Mean value
- Standard deviation
- Variation coefficient
- Sum of all values
- Lowest value (minimum)
- Highest value (maximum)
- Spread: Difference between maximum and minimum

The "Statistics" application can be combined with the following functions:

- Unit change, only available in the weighing display, before saving the initial weight value
- ID marking
- Automatic taring

Procedure

- ▶ Open the main menu.
- ▶ Start the task for the "Statistics" application.
- ▶ Zero the device.
- ▶ Place the sample on the weighing pan.
- ▶ To start the recording of the statistics: Press the [Confirm] button on the keypad.
- ▷ The current weight value is saved and the device is automatically tared.
- ▶ To save the next value: Place a new sample on the weighing pan and press the [Confirm] button.
- ▶ To display an overview of the saved data: Press the [Report] button.
- ▶ To print the current statistics: Press the [Print] button.
- ▶ To exit the current statistics, and to delete the saved values: Press the [Exit] button.

9 Cleaning and Maintenance

9.1 Preparing the Device

Procedure

- ▶ Turn the device off.
- ▶ Disconnect the device from the power supply. To do so, disconnect the power supply cable from the wall outlet.
- ▶ Remove weighing pan and all associated components from the weighing module, e.g. shield frame, pan support.

9.2 Cleaning the Device

NOTICE

Corrosion or damage to the device due to unsuitable cleaning agents!

- ▶ Do **not** use corrosive, chloride-containing, or aggressive cleaning agents.
- ▶ Do **not** use cleaning agents that contain abrasive ingredients, e.g. scouring agents, steel wool.
- ▶ Do **not** use solvent-based cleaning agents.
- ▶ Check whether the cleaning agents used are compliant materials (see Chapter "15.4 Materials", page 91).
- ▶ Make sure that cleaning materials, such as cloths, are only slightly damp.

Procedure

- ▶ **NOTICE** Malfunction or damage to the device due to the ingress of moisture or dust!
  - ▶ Remove dust and powdery sample residue with a brush or hand-held vacuum cleaner.
- ▶ **NOTICE** Corrosion or damage to the weighing pan due to unsuitable cleaning agents!
  - ▶ Wipe down the weighing pan and the shield frame with a cleaning agent and a cloth. The cleaning agent must be suitable for stainless steel and titanium.
- ▶ Wipe the associated components of the weighing pan with a brush or a damp cleaning cloth, e.g. shield frame, support pan.
- ▶ Wipe the device housing with a damp cloth. For more severe contamination, use a mild soap solution.

Tip

We recommend cleaning the weighing pan on a regular basis, e.g. weekly. Do **not** allow deposits to form on the weighing pan.

Protective oil may be applied to the weighing pan for additional protection. The protective oil must be suitable for stainless steel and titanium.

9.3 Assembling and Connecting the Device

Procedure

▶ Replace the weighing pan and the associated components on the weighing module (see Chapter 5.7, page 43).
▶ Re-connect the device to the power supply (see Chapter 6.2, page 45).

9.4 Maintenance Schedule

Interval	Component	Action	Chapter, page
Monthly to every 2 years, depending on the operating conditions	Device	Contact Sartorius Service	17, 98

9.5 Performing a Software Update

A software update can be installed from a USB mass storage device using the device's USB-A connection. An update can also be carried out from a server via other connectors of the device. A software update can extend or change functionality.

Requirements

- The device is switched on.
- The software update is saved on a USB mass storage device.
- The USB mass storage device is formatted with file system "FAT32".

Procedure

▶ Download the software update from the Sartorius website onto the USB mass storage device.
▶ If this relates to a zip file: Unzip the software update on the stick.
▶ Insert the USB mass storage device with the software update into one of the device's USB-A connection sockets.
▶ Select the "Update Firmware" menu entry in the "Settings / Device Maintenance" menu.
▶ Select "USB stick" as the connector.
▷ The software update takes approx. 3 minutes.
▷ Once the software update is complete: The software version number is updated in the login display.

9.6 Performing a QAPP Center Update

The QAPP center update can be installed from a USB mass storage device using the device's USB-A connection. An update can also be carried out from a server via other connectors of the device.

Requirements

- The device is switched on.
- The QAPP Center update is saved on a USB mass storage device or on a server via a connector.
- The USB mass storage device is formatted with file system "FAT32".

Procedure

▶ Download the QAPP center update from the Sartorius website onto the USB mass storage device.
▶ If this relates to a zip file: Unzip the QAPP center update on the stick.
▶ Insert the USB mass storage device with the QAPP center update into one of the device's USB-A connections.
▶ Select the "Install QAPP Center" menu entry in the "Settings" / "Device Maintenance" menu.
▶ Select "USB stick" as the connector.
▶ Tap on the desired update.
▶ Once the software update is complete: Confirm successful installation with the [OK] button.

10 Malfunctions

10.1 Warning Messages

Warning message	Fault	Cause	Remedy	Chapter, page
Disp.Err.	The value to be output **cannot** be shown in the operating display.	The data to be displayed is **not** compatible with the set display format.	Adjust the display settings in the menu, e.g. resolution, unit, decimal places.	
High	The device is overloaded.	The device's maximum weighing capacity has been exceeded.	Reduce the applied weight to below the device's maximum weighing capacity.	15.7, 92
Low	The modulation of the weighing module's weighing converter is too low.	**No** weighing pan has been placed on the balance. A previously forgotten weight was removed after starting the device.	Insert the weighing pan into the device and switch the device off and on again.	
Com.Err.	The device is **not** receiving any weight values.	**No** communication exists between the display and control unit and the weighing module.	Wait until the display and control unit restores the communication with the weighing module.	
			If the problem occurs again: Contact Sartorius Service.	17, 98

10.2 Troubleshooting

Fault	Cause	Remedy	Chapter, page
The operating display is blank.	The device is disconnected.	Check the connection to the power supply.	6.2, 45
	The AC adapter is **not** connected.	Connect the power supply cable to the power supply.	6.2, 45
The displayed weight value changes constantly.	The installation site is unstable.	Adjust the parameters in the "Ambient conditions" submenu.	7.7.4, 53
		Change the installation site.	5.2, 39
	A foreign object is positioned between the weighing pan and the housing.	Remove the foreign object.	
The weight readout displayed by the device is obviously wrong.	The device was **not** calibrated.	Calibrate the device.	8.8, 76
	The device was **not** tared before weighing.	Tare the device.	

11 Decommissioning

11.1 Decommissioning the Device

Procedure

- ▶ Turn the device off.
- ▶ Disconnect the device from the power supply.
- ▶ Disconnect the device from all connected devices and all accessories, e.g. printer.
- ▶ Clean the device (see Chapter 9.2, page 82).
- ▶ If below-balance weighing has been set up:
  - ▶ Turn over the device and place on a soft surface.
  - ▶ Remove the hook for below-balance weighing from the thread.
  - ▶ Insert below-balance cap (1) back into the opening (2) in the device base and screw in with a suitable screwdriver.
  - ▶ Place the device on the device base on a level surface.

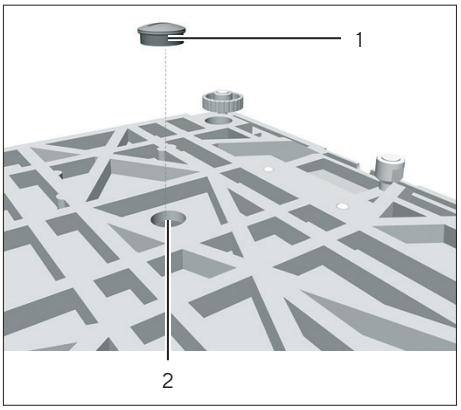

12 Transport

12.1 Transporting the Device

Procedure

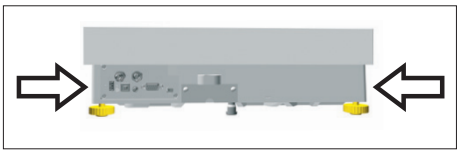

- ▶ Only lift the device by its base.

- ▶ When lifting and transporting, ensure that **no** personnel or objects are in the way.
- ▶ Get help from additional persons when lifting and transporting the device.
- ▶ Use suitable conveyance devices, e.g. trolleys, for long transport routes.

13 Storage and Shipping

13.1 Storage

Procedure

- ▶ Turn the device off.
- ▶ Disconnect the device from the power supply.
- ▶ Disconnect the device from all connected devices and all accessories, e.g. printer.
- ▶ Clean the device (see Chapter 9.2, page 82).
- ▶ Store the device according to the ambient conditions (see Chapter 15.3, page 90).

13.2 Returning Device and Parts

Defective devices or device components can be returned to Sartorius. Returned devices must be clean, decontaminated, and properly packed, e.g. in the original packaging.

Transport damage as well as measures for subsequent cleaning and disinfection of the device or device components by Sartorius shall be charged to the sender.

⚠ WARNING

Risk of injury due to contaminated devices!

Devices contaminated with hazardous materials [nuclear, biological, or chemical (NBC)] will **not** be accepted for repair or disposal.

- ▶ Observe the information on decontamination (see Chapter 14.1, page 88).

Procedure

- ▶ Switch off the device.
- ▶ Disconnect the device from the power supply.
- ▶ Disconnect the device from all connected devices and all accessories, e.g. printer.
- ▶ Clean the device.
- ▶ Contact Sartorius Service for instructions on how to return devices or device components (please refer to www.sartorius.com for return instructions).
- ▶ Pack the device and the device components properly for return, e.g. in the original packaging.

14 Disposal

14.1 Information on Decontamination

The device does **not** contain any hazardous materials that would necessitate special disposal actions.

Contaminated samples used during the process are potentially hazardous materials that could cause biological or chemical hazards.

If the device has come into contact with hazardous substances: Steps must be taken to ensure proper decontamination and declaration. The operator is responsible for adhering to local government regulations on the proper declaration of transport and disposal and the proper disposal of the device.

⚠ **WARNING**

Risk of injury due to contaminated devices!

Devices contaminated with hazardous materials (NBC contamination) will **not** be accepted by Sartorius for repair or disposal.

14.2 Disposing of Device and Parts

14.2.1 Information on Disposal

The device and the device accessories must be disposed of properly by disposal facilities.

A lithium cell battery, type CR2032, is installed inside the device. Batteries must be disposed of properly by disposal facilities.

The packaging is made of environmentally friendly materials that can be used as secondary raw materials.

14.2.2 Disposal

Requirements

The device has been decontaminated.

Procedure

- ▶ Dispose of the device. Follow the disposal instructions on our website (www.sartorius.com).
- ▶ Inform the disposal facility that there is a lithium cell battery, type CR2032, installed inside the device.
- ▶ Dispose of the packaging in accordance with local government regulations.

15 Technical Data

15.1 Dimensions and Weight

15.1.1 High-capacity Precision Balance

		With rectangular weighing pan	With round weighing pan
	Unit	Value	Value
Dimensions (L × W × H)	mm	444 × 400 × 126	444 × 400 × 159
Weighing pan size	mm	400 × 300	Ø 233
Weight, approx.	kg	15.8	17.1

15.2 Power Supply

15.2.1 Device

Only by Sartorius AC adapter YEPS03-15V0

15.2.2 Power Supply Unit

	Unit	Value
Item No.		YEPS03-15V0
Primary		
AC voltage	V	100–240 (±10%)
Frequency	Hz	50–60 (±5%)
Current consumption, maximum	A	1.0
Secondary		
DC voltage at 2 A output current	V	14.25–15.75
Power, maximum	W	30
Short circuit protection: Electronic		
Protection class according to IEC 62368-1		I
Pollution level according to IEC 61010-1		2
Overvoltage category according to IEC 606641-1		II
Installation site according to IEC 62368-1, maximum altitude above sea level	m	5000

	Unit	Value
Temperature		
In operation	°C	0 – +40
During storage and transport	°C	-20 – +80
Connector for mains connection according to IEC 60320-1/C14: 3-pin		
Power supply cable		
Power supply cable according to IEC 60320-1/C14: Country-specific, 3-pin, two-sided plug		
Other data: See label on AC adapter		

15.2.3 Safety of Electrical Equipment

According to EN 61010-1/IEC 61010-1 Safety requirements for electrical equipment for measurement, control, and laboratory use – Part 1: General Requirements

15.2.4 Electromagnetic Compatibility

Interference resistance
Suitable for use in industrial areas
Transient emissions
Class B
Suitable for use in residential areas and areas that are connected to a low voltage network that also supplies residential buildings.

15.3 Ambient Conditions

15.3.1 Installation Site

	Unit	Value
Installation site		
Standard laboratory rooms		
Installation site according to IEC 60259-1, maximum altitude above sea level	m	3000
For indoor use only		
Temperature		
In operation	°C	+5 – +40
In operation for conformity-assessed devices: See information on the device's ID plate		
During storage and transport	°C	-20 – +60

	Unit	Value
Relative humidity		
At temperatures of up to 31°C	%	80
Then linear decrease from 80% at 31°C to 50% at 40°C		
No heat from heating systems or direct sunlight		
No drafts from open windows, AC systems, or doors		
No vibrations		
No "heavy traffic" areas (personnel)		
No electromagnetic fields		
No dry air		

15.3.2 Ambient Temperature for the isoCAL Function

	Unit	Value
Scope of application as per Directive 2014/31/EU		
With isoCAL function	°C	+10 – +30
Without isoCAL function	°C	+10 – +30

15.3.3 Protection Class

	Value
IP protection according to IEC 60529-1	IP 54

15.4 Materials

Housing: Die-cast aluminum and stainless steel 1.4401 | 1.4404
Control unit: Die-cast aluminum, painted, float glass and plastic PBT, PP

15.5 Integrated Clock

	Unit	Value
Maximum deviation per month (RTC)	s	30

15.6 Backup Battery

	Unit	Value
Lithium battery, type CR2032		
Service life at room temperature, minimum	Years	10

15.7 Metrological Data

15.7.1 Models MCA32202P | MCA70201S | MCA50201S | MCA36201S

		MCA32202P	MCA70201S	MCA50201S	MCA36201S
	Unit	Value	Value	Value	Value
Scale interval (d)	g	0.01 | 0.1	0.1	0.1	0.1
Maximum capacity (Max)	g	4200 | 32200	70200	50200	36200
Repeatability at 5% load					
Standard deviation of the load values, tolerance	g	0.04	0.1	0.1	0.1
Standard deviation of the load values, typical value	g	0.02	0.04	0.04	0.02
Repeatability at approx. maximum capacity					
Standard deviation of the load values, tolerance	g	0.1	0.1	0.1	0.1
Standard deviation of the load values, typical value	g	0.02	0.04	0.04	0.02
Linearity deviation					
Tolerance	g	0.05 | 0.2	0.5	0.5	0.2
Typical value	g	0.02 | 0.1	0.15	0.15	0.1
Deviation when load is off-center, positions according to OIML R76					
Test weight	g	10000	20000	20000	10000
Tolerance	g	0.2	0.5	0.5	0.3
Typical value	g	0.1	0.3	0.3	0.2
Sensitivity drift between +10°C and +30°C	ppm / K	2	2	2	2
Tare maximum capacity: Less than 100% of maximum capacity					
Accuracy class according to Directive 2014 / 31 / EU		–	II	II	II
Verification scale interval (e) according to Directive 2014 / 31 / EU	g	–	1	1	1
Minimum load (Min) according to Directive 2014 / 31 / EU	g	–	5	5	5
Minimum initial weighing according to USP (United States Pharmacopeia), Chap. 41					
Optimum minimum initial weighing	g	8.2	82	82	82
Typical minimum initial weighing	g	8.2	82	82	82
Typical stabilization time	s	2	1.5	1.5	1.5
Typical measurement time	s	2	1.5	1.5	2

15.7.2 Models MCA36201P | MCA20201S | MCA11201S | MCA70200S | MCA36200S

		MCA 36201P	MCA 20201S	MCA 11201S	MCA 70200S	MCA 36200S
	Unit	Value	Value	Value	Value	Value
Scale interval (d)	g	0.1 | 1	0.1	0.1	1	1
Maximum capacity (Max)	g	10200 | 36200	20200	11200	70200	36200
Repeatability at 5% load						
Standard deviation of the load values, tolerance	g	0.1	0.1	0.1	0.5	0.5
Standard deviation of the load values, typical value	g	0.02	0.02	0.02	0.2	0.2
Repeatability at approx. maximum capacity						
Standard deviation of the load values, tolerance	g	0.1	0.1	0.1	0.5	0.5
Standard deviation of the load values, typical value	g	0.02	0.02	0.02	0.2	0.2
Linearity deviation						
Tolerance	g	0.2	0.2	0.2	1	1
Typical value	g	0.1	0.06	0.06	0.2	0.2
Deviation when load is off-center, positions according to OIML R76						
Test weight	g	10000	5000	5000	20000	10000
Tolerance	g	0.3	0.3	0.3	1	1
Typical value	g	0.2	0.2	0.2	0.6	0.5
Sensitivity drift between +10°C and +30°C	ppm / K	2	2	2	3	3
Tare maximum capacity: Less than 100% of maximum capacity						
Accuracy class according to Directive 2014 / 31 / EU		II	II	II	II	II
Verification scale interval (e) according to Directive 2014 / 31 / EU	g	1	1	1	10	1
Minimum load (Min) according to Directive 2014 / 31 / EU	g	5	5	5	50	50
Minimum initial weighing according to USP (United States Pharmacopeia), Chap. 41						
Optimum minimum initial weighing	g	82	82	82	820	820
Typical minimum initial weighing	g	82	82	82	820	820
Typical stabilization time	s	1.5	1.5	1.5	1	1
Typical measurement time	s	2	2	2	1.2	1.2

15.8 Recommended Calibration Weight

		MCA32202P	MCA70201S	MCA50201S	MCA36201S
	Unit	Value	Value	Value	Value
External test weight	kg	30	70	50	30
Recommended accuracy class		F1	F1	F1	F1

		MCA36201P	MCA20201S	MCA11201S	MCA70200S
	Unit	Value	Value	Value	Value
External test weight	kg	30	20	10	70
Recommended accuracy class		F1	F1	F1	F1

		MCA36200S
	Unit	Value
External test weight	kg	30
Recommended accuracy class		F1

15.9 isoCAL Function

15.9.1 Models MCA32202P | MCA70201S | MCA50201S | MCA70200S

	Unit	Value
isoCAL is triggered by the following criteria:		
In the event of a temperature change	K	2
After a time interval	h	12
After successful leveling		

M With conformity-assessed devices, isoCAL **cannot** be turned off.

15.9.2 Models MCA36201S | MCA36201P | MCA20201S | MCA11201S | MCA36200S

	Unit	Value
isoCAL is triggered by the following criteria:		
In the event of a temperature change	K	4
After a time interval	h	12
After successful leveling		

15.10 Data Storage Device

	Value
Maximum number of data records	150000

15.11 Interfaces

15.11.1 Specifications for the COM-RS232 Interface

Type of interface	Serial interface
Interface operation	Full duplex
Level	RS232
Connection	D-sub connector, 9-pin
Pin assignment 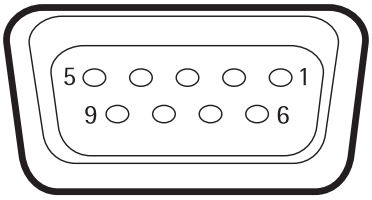 	Pin 1: **Not** assigned Pin 2: Data output (TxD) Pin 3: Data input (RxD) Pin 4: **Not** assigned Pin 5: Internal ground Pin 6: **Not** assigned Pin 7: Clear to Send (CTS) Pin 8: Request to Send (RTS) Pin 9: **Not** assigned

15.11.2 Specifications for the USB-A Interface

Communication	USB host (master)
Connectable devices	Sartorius printers, USB memory sticks, USB barcode scanners, USB keyboards

15.11.3 Specifications for the USB-B Interface

Communication	USB device (slave)
Type of interface	Virtual serial interface (virtual COM-port, VCP) and “PC direct” communication

16 Accessories

16.1 Accessories

This table contains an excerpt of the accessories that can be ordered.
For information on other products, contact Sartorius.

16.1.1 Printers and Communication

Item	Quantity	Order number
Thermal transfer | thermal printer for GLP | GMP printouts on continuous paper and labels	1	YDP30
Thermal transfer | thermal network printer with Ethernet connection for GLP | GMP printouts on continuous paper and labels	1	YDP30-NET
Wireless nano USB adapter for company network or independent Wi-Fi network, e.g., operation with a Sartorius network printer YDP30-NET (only for Europe)	1	YWLAN01MS
Wireless nano router, e.g., for Sartorius network printer YDP30-NET for operation in an independent Wi-Fi network (only for Europe)	1	YWLAN02MS
Display cable, 3 m, for separate installation of display and weighing units, installation by Sartorius Service or at the factory	1	VF4754
Installation of display cable, 3 m, for separate installation of display and weighing units	1	VF4016
RS232C connection cable, 9-pin, 3 m, for connection to a PC with 9-pin COM interface	1	VF4761
USB QR barcode scanner	1	YBR05
Sartorius Wedge, software for data communication between the PC and device	1	YSW02

16.1.2 Displays and Input | Output Elements

Item	Quantity	Order number
MCE operating display with color TFT display and touch screen	1	69MS0128
Motion sensor for triggering a maximum of 4 functions via gesture control, selection via menu	1	YHS02MS

16.1.3 Weighing Tables

Item	Quantity	Order number
Weighing table		
Made from synthetic stone, with vibration dampening	1	YWT03
Made from wood and synthetic stone	1	YWT09
Wall console	1	YWT04

16.1.4 Weighing Accessories

Item	Quantity	Order number
Weighing scoop made from chrome-nickel steel, L 90 mm × W 32 mm × H 8 mm	1	641214
Stand for raising the control unit		YDH04MS
Hook for below-balance weighing for precision weighing modules with scale intervals of 100 mg	1 g and weighing capacity > 20 kg, **not** suitable for conformity-assessed devices	1	69EA0040

17 Sartorius Service

Sartorius Service is available for queries regarding the device.
For information about the service addresses, services provided, or to contact a local representative, please visit the Sartorius website (www.sartorius.com).

When contacting Sartorius Service with questions about the system or in the event of malfunctions, be sure to have the device information, e.g. serial number, hardware, firmware, and configuration, to hand. Consult the information on the manufacturer's ID label and in the "General Device Information" menu (see Chapter "4.14 Menu Structure", page 30).

18 Conformity Documents

18.1 EU Declaration of Conformity

The attached Declaration of Conformity hereby confirms compliance of the device with the directives cited.

M

The declaration of conformity supplied here is for conformity-assessed (verified) balances for use in the EEA. Please keep it in a safe place.

SARTORIUS

Original

EG-/EU-Konformitätserklärung
EC / EU Declaration of Conformity

Hersteller
Manufacturer

Sartorius Lab Instruments GmbH & Co. KG
37070 Goettingen, Germany

erklärt in alleiniger Verantwortung, dass das Betriebsmittel
declares under sole responsibility that the equipment

Geräteart
Device type

Elektronische Präzisions-, Milligramm-, Analysen-, Semimikro-, Mikro-Klein- und Hochlastwaage | Netzgerät | Handsensor | Klimamodul
Electronical Precision, Milligram, Analytical, Semi micro, Micro-Small, and High-Capacity Balance | Power Supply | Hand sensor | Climatic module

Modell
Model

MCAvw-2x-y, MCEvw-2x-y | YEPS03-15V0 | YHS02MS | YCM20MC, YCM20MC-DAKKS

v = 2.7, 3.6, 6.6, 10.6, 124, 125, 224, 225, 323, 324, 524, 623, 1202, 1203, 2202, 2203, 3203, 4202, 5201, 5202, 5203, 6202, 8201, 8202, 10202, 11201, 12201, 14202, 20201, 32202, 36200, 36201, 50201, 70200, 70201;
w = S, P; **x** = S00, S01, CEU, CFR, CCN, OBR, OIN, ORU, OJP; **y** = A, E, F, I, M, O, R, U

in der von uns in Verkehr gebrachten Ausführung allen einschlägigen Bestimmungen der folgenden Europäischen Richtlinien entspricht und die anwendbaren Anforderungen folgender harmonisierter Europäischer Normen einschließlich deren zum Zeitpunkt der Erklärung geltenden Änderungen erfüllt:

in the form as delivered fulfils all the relevant provisions of the following European Directives and meets the applicable requirements of the harmonized European Standards including any amendments valid at the time this declaration was signed listed below:

	EMV / EMC	RoHS	Maschinen / Machines
Richtlinie *Directive*	2014/30/EU	2011/65/EU	2006/42/EG 2006/42/EC
Norm(en) *Standard(s)*	EN 61326-1:2013	EN 50581:2012	EN ISO 12100:2010 EN 61010-1:2010*)

Die Person, die bevollmächtigt ist, die technischen Unterlagen zusammenzustellen:
The person authorised to compile the technical file:

Sartorius Lab Instruments GmbH & Co. KG
Electronics & Product Compliance
37070 Goettingen, Germany

Sartorius Lab Instruments GmbH & Co.
KG Goettingen, 2021-01-14

i.V. R. Baumfalk

Dr. Reinhard Baumfalk
Head of Product Development (LPS Division)

i.A. H. Yildirim

Halil Yildirim
Product Compliance Officer (SLI)

*: angewandte, jedoch für Maschinen nicht harmonisierte Norm /
applied standard, which however is not harmonized for machines

Doc: 2369814-03 SLI18CE001-03.de,en 1/1 PMF: 2369813 OP-113_fo1_2020.07.07

18.2 UK Declaration of Conformity

UK CA

Original

UK Declaration of Conformity

SARTORIUS

Manufacturer Sartorius Lab Instruments GmbH & Co. KG
37070 Goettingen, Germany

declares under sole responsibility that the equipment

Device type Electronical Precision, Milligram, Analytical, Semi micro, Micro-Small and High-Capacity Balance | Power Supply | Hand sensor | Climatic module

Type series CUBIS

Model MCAvw-2x-y, MCEvw-2x-y | YEPS03-15V0 | YHS02MS | YCM20MC, YCM20MC-DAKKS

v = 2.7, 3.6, 6.6, 10.6, 124, 125, 224, 225, 323, 324, 524, 623, 1202, 1203, 2202, 2203, 3203, 4202, 5201, 5202, 5203, 6202, 8201, 8202, 10202, 11201, 12201, 14202, 20201, 32202, 36200, 36201, 50201, 70200, 70201;
w = S, P; x = S00, S01, CEU, CFR, CCN, OBR, OIN, ORU, OJP; y = A, E, F, I, M, O, R, U

in the form as delivered fulfils all the relevant provisions of the following British Regulations and meets the applicable requirements of the British Designated Standards including any amendments valid at the time this declaration was signed listed below:

The Electromagnetic Compatibility Regulations 2016
UK Statutory Instruments 2016 No. 1091

BS EN 61326-1:2013

The Restriction of the Use of Certain Hazardous Substances in Electrical and Electronic Equipment Regulations 2012; UK Statutory Instruments 2012 No. 3032

BS EN 50581:2012

The Supply of Machinery (Safety) Regulations 2008
UK Statutory Instruments 2008 No. 1597

BS EN ISO 12100:2010, BS EN 61010-1:2010*)

The person authorised to compile the technical file:

Sartorius UK Ltd.
Longmead Business Centre, Blenheim Road
KT19 9 QQ Epsom, Surrey, UK

Sartorius Lab Instruments GmbH & Co. KG
Goettingen, 2021-04-28

i.V. R. Baumfalk
Dr. Reinhard Baumfalk
Head of Product Development (LPS)

i.A. H. Yildirim
Halil Yildirim
Product Compliance Officer (SLI)

*: applied standard, which however is not harmonized for machines

Doc: 2754637-00 SLI21UKCA018-00.en 1/1 PMF: 2369813 OP-113_fo18_2021.01.01

18.3 Certificate of Compliance

Certificate of Compliance

Certificate: 70185847 **Master Contract:** 167555 (056628)

Project: 70185847 **Date Issued:** 2018-09-24

Issued to: **Sartorius Lab Instruments GmbH & Co. KG**
Otto-Brenner-Strasse 20
Goettingen, Niedersachsen 37079
GERMANY

The products listed below are eligible to bear the CSA Mark shown with adjacent indicators 'C' and 'US' for Canada and US or with adjacent indicator 'US' for US only or without either indicator for Canada only.

C US

Issued by: *Jean-Philippe Laplante*
Jean-Philippe Laplante

PRODUCTS

CLASS - C872106 - ELECTRICAL LABORATORY EQUIPMENT

CLASS - C872186 - ELECTRICAL LABORATORY EQUIPMENT-Certified to US Standards

Digital scale, models: MCA Series & MCE Series; rated: 15Vdc, 12W max for external PS rated: 100-240Vac, 50-60Hz, 1.0A max

Notes:

1. The above model is Equipment Class I (powered by external class I power supply with detachable power supply cord), Pollution Degree 2 and Overvoltage category II
2. Mode of operation: Continuous
3. Environmental Conditions: 5 to 40 °C, 3000 m max, 80% rH max

DQD 507 Rev. 2016-02-18 Page 1

Certificate: 70185847 **Master Contract:** 167555
Project: 70185847 **Date Issued:** 2018-09-24

APPLICABLE REQUIREMENTS

CSA Standards:

CAN/CSA-C22.2 No. 61010-1-12 - Safety Requirements for Electrical Equipment for Measurement, Control, and Laboratory Use, Part 1: General Requirements

UL Standards:

UL Std. No. 61010-1 (3rd Edition) - Safety Requirements for Electrical Equipment for Measurement, Control, and Laboratory Use - Part 1: General Requirements

CONDITIONS OF ACCEPTABILITY

(1) Equipment is intended to be used with power supply FSP Group Inc, Model FSP030-DGAN3 or Sinpro Electronics Co Ltd, Model SPU31-106 or PSFD rated output 15Vdc, 2A. The equipment can also be used with any other power supply approved for Canada and USA under the 60950-1 or 61010-1 or equivalent standards and which provides Reinforced insulation between mains and secondary circuits. It must be rated for 3000m and up to 40°C and must provide an output of 15Vdc LPS with a minimum of 1A

(2) Detachable cord set, to be delivered with the product, consisting of minimum NEMA 5-15 Plug, 3 x 18AWG cable and C13 Appliance coupler. For countries outside Canada and the USA the cable must be equivalent and must fulfill the national requirements for detachable cord sets.

Sartorius Lab Instruments GmbH & Co. KG
Otto-Brenner-Strasse 20
37079 Goettingen, Germany

Phone: +49 551 308 0
www.sartorius.com

The information and figures contained in these instructions correspond to the version date specified below.
Sartorius reserves the right to make changes to the technology, features, specifications and design of the equipment without notice.
Masculine or feminine forms are used to facilitate legibility in these instructions and always simultaneously denote the other gender as well.

Copyright notice:
This instruction manual, including all of its components, is protected by copyright.
Any use beyond the limits of the copyright law is not permitted without our approval.
This applies in particular to reprinting, translation and editing irrespective of the type of media used.

© Sartorius Germany

Last updated:

05 | 2021

Printed in the EU on paper bleached without chlorine. | JW
Publication No.: WMC6026-e210505